0267 Queen Bed

Assembly Instructions

WI-0226

1 Assembled View

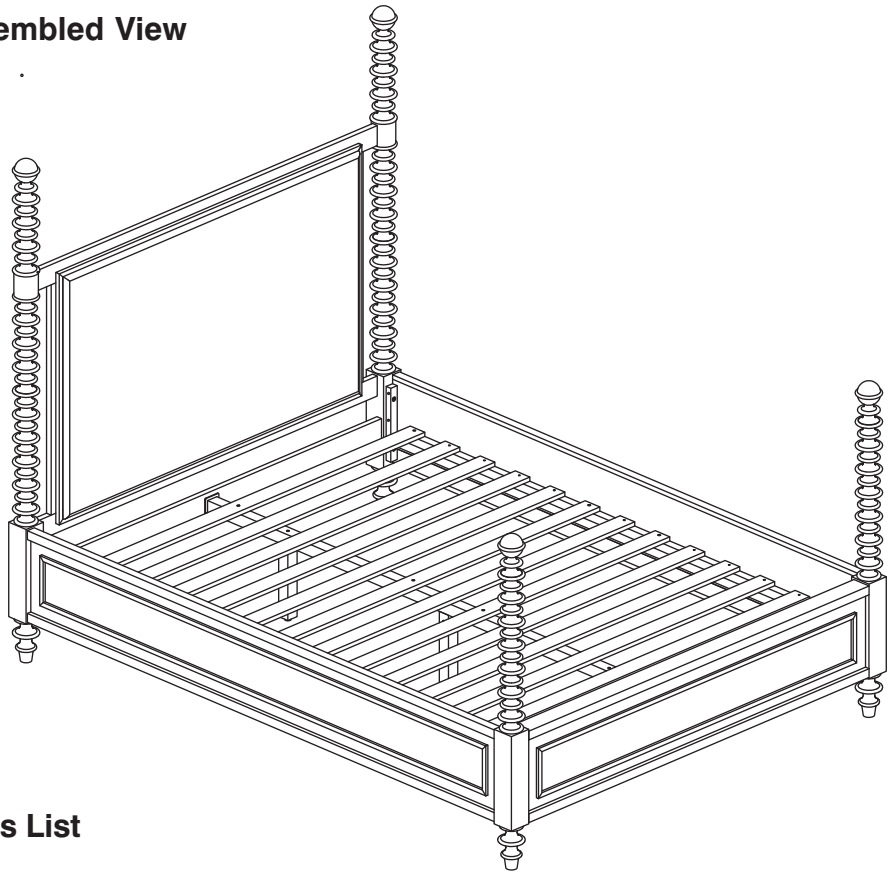

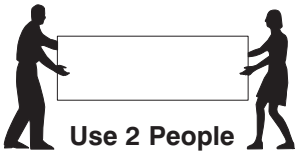

<u>Note:</u> Do not assemble using power tools. This can cause the bolts to be overtightened

2 Parts List

Parts in Box A:

A Headboard Panel **x 1**

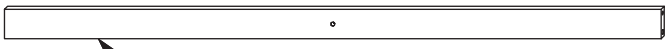

B Headboard Support **x 1**

3 Parts List

Parts in Box B:

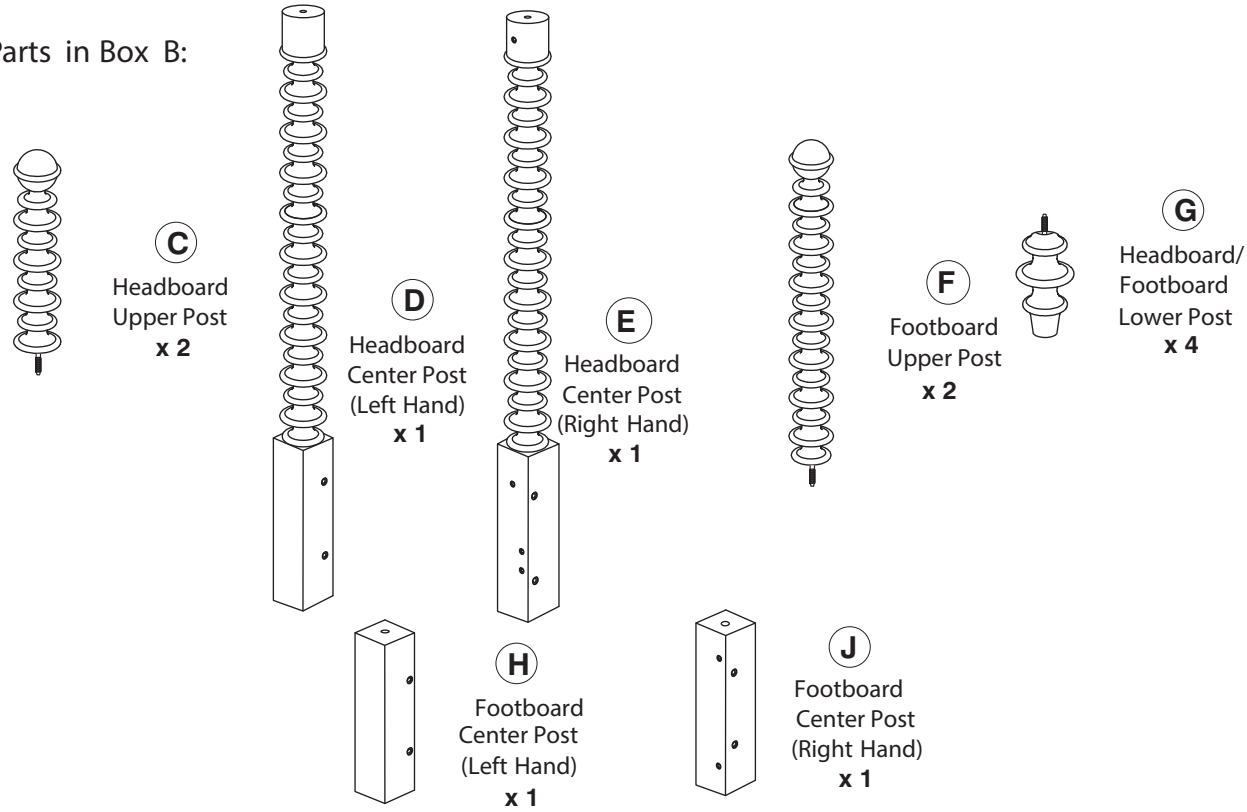

Parts in Box C:

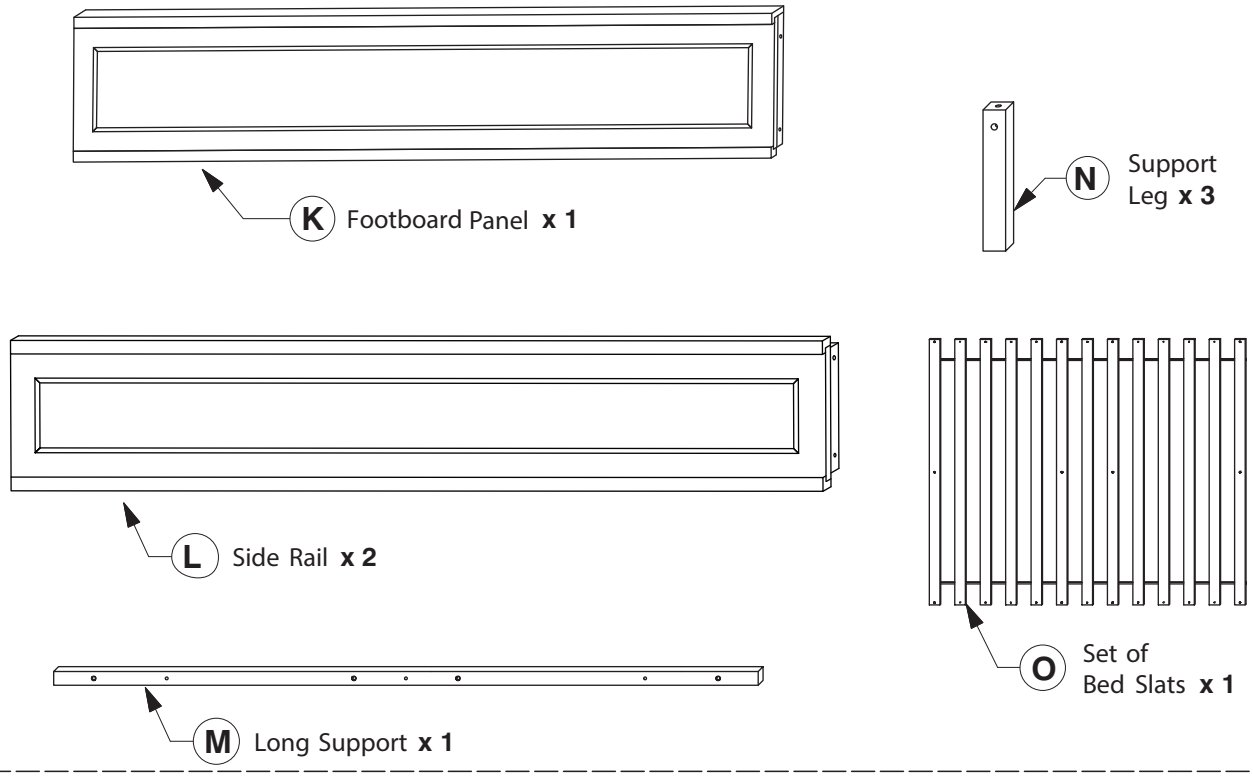

4 Hardware List

1 M6 x 15mm JCB **x 4**

2 M6 x 40mm JCB **x 32**

3 M6 x 90mm JCB **x 3**

4 Barrel Nut **x 3**

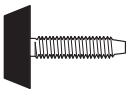

5 Adjustable Foot **x 3**

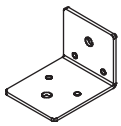

6 Center Rail Bracket **x 2**

7 Wood Screw (M4 x 32mm) **x 18**

8 Allen Key **x 1**

5 Assemble the Support Leg (N) to the Long Support (M).

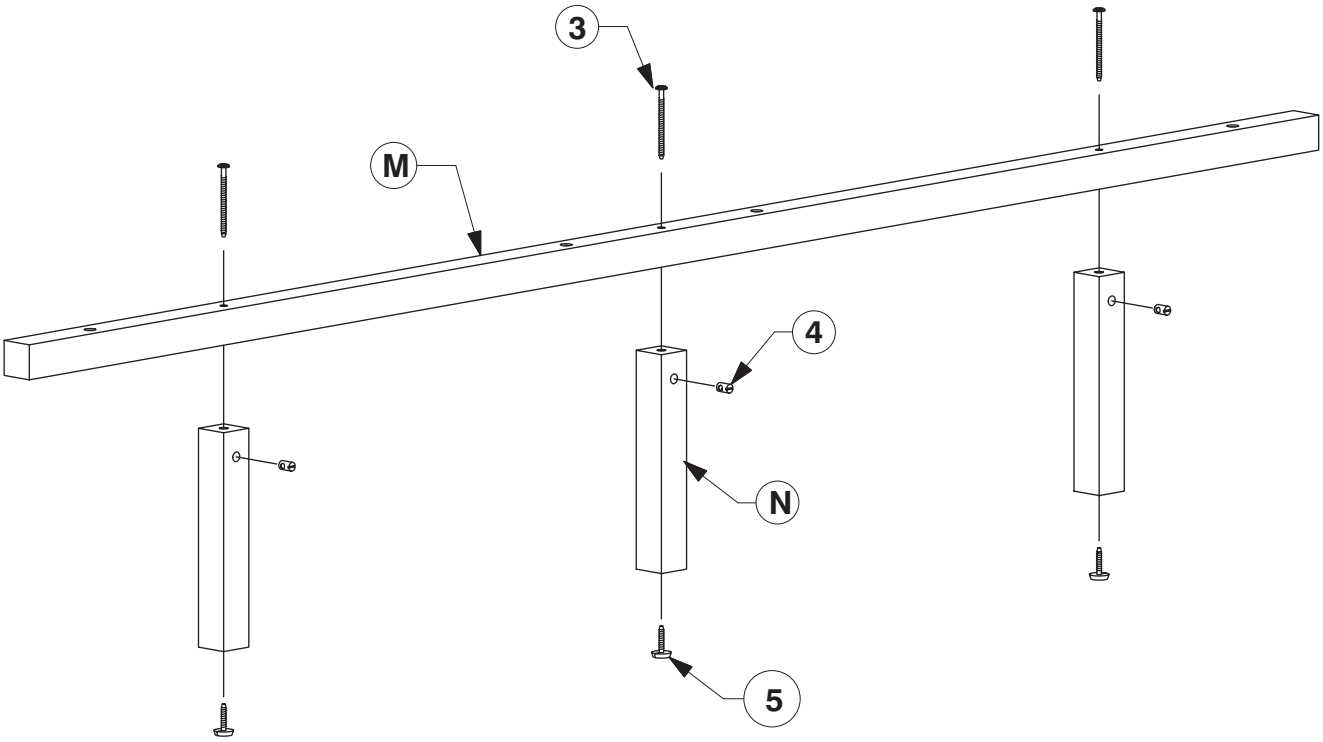

6 **Assemble Headboard Upper Post (C) and HB/FB Lower Post (G) to the Headboard Center Post (D & E).**

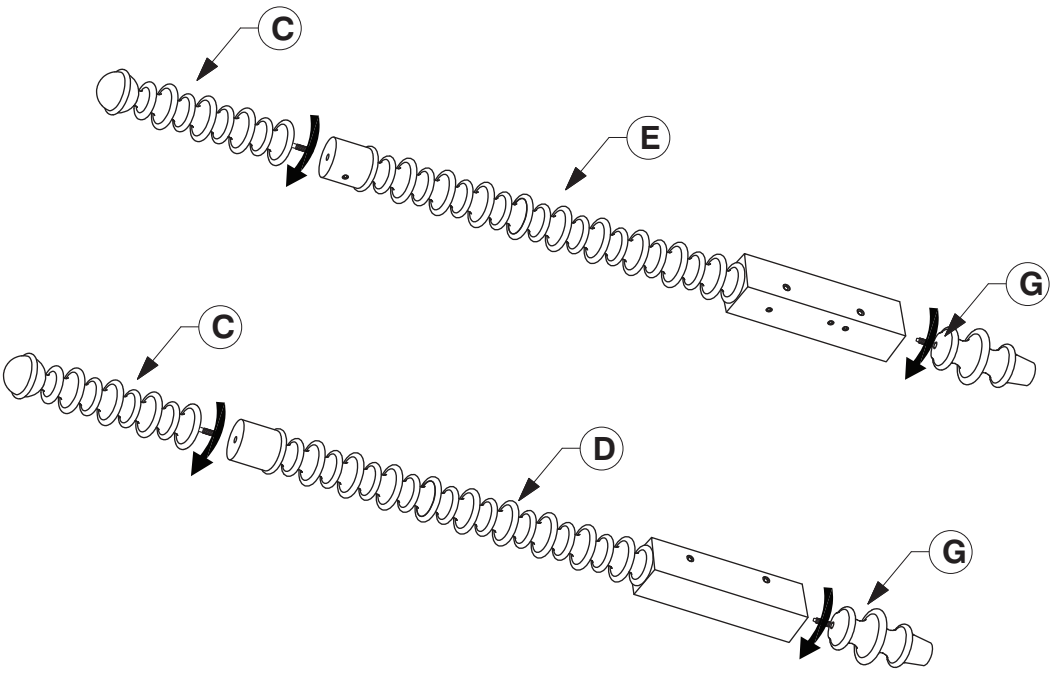

7 **Assemble Footboard Upper Post (F) and HB/FB Lower Post (G) to the Footboard Center Post (H & J).**

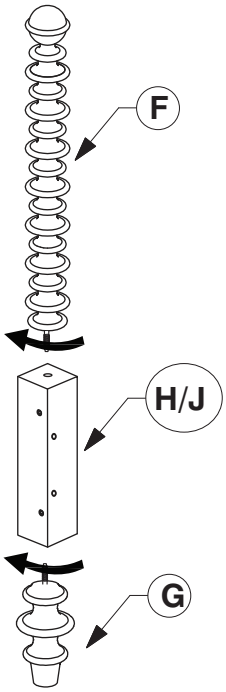

8 Attach the Headboard Post (D & E) to the Headboard Panel (A) and Headboard Support (B).

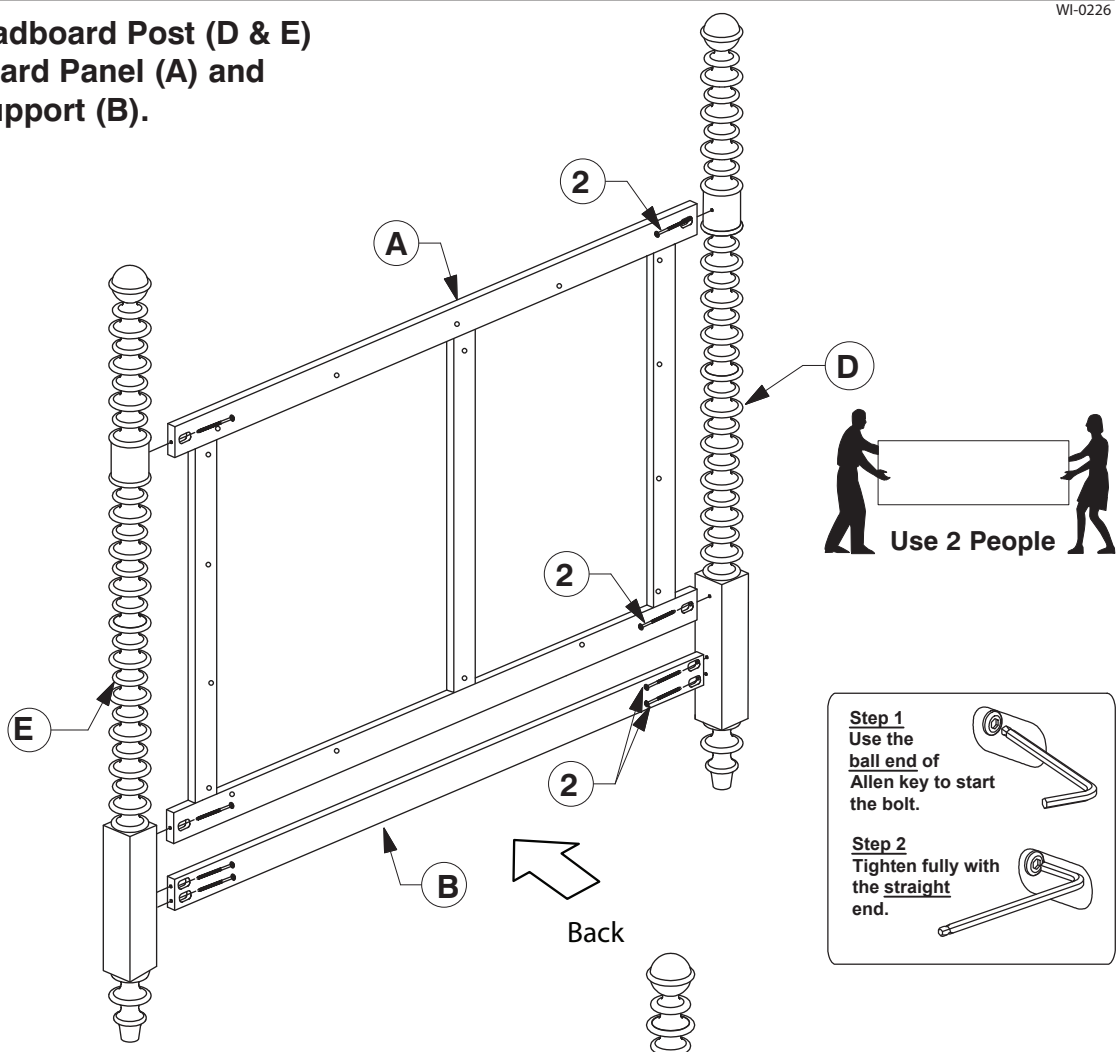

9 Attach the Footboard Post (H & J) to the Footboard Panel (K).

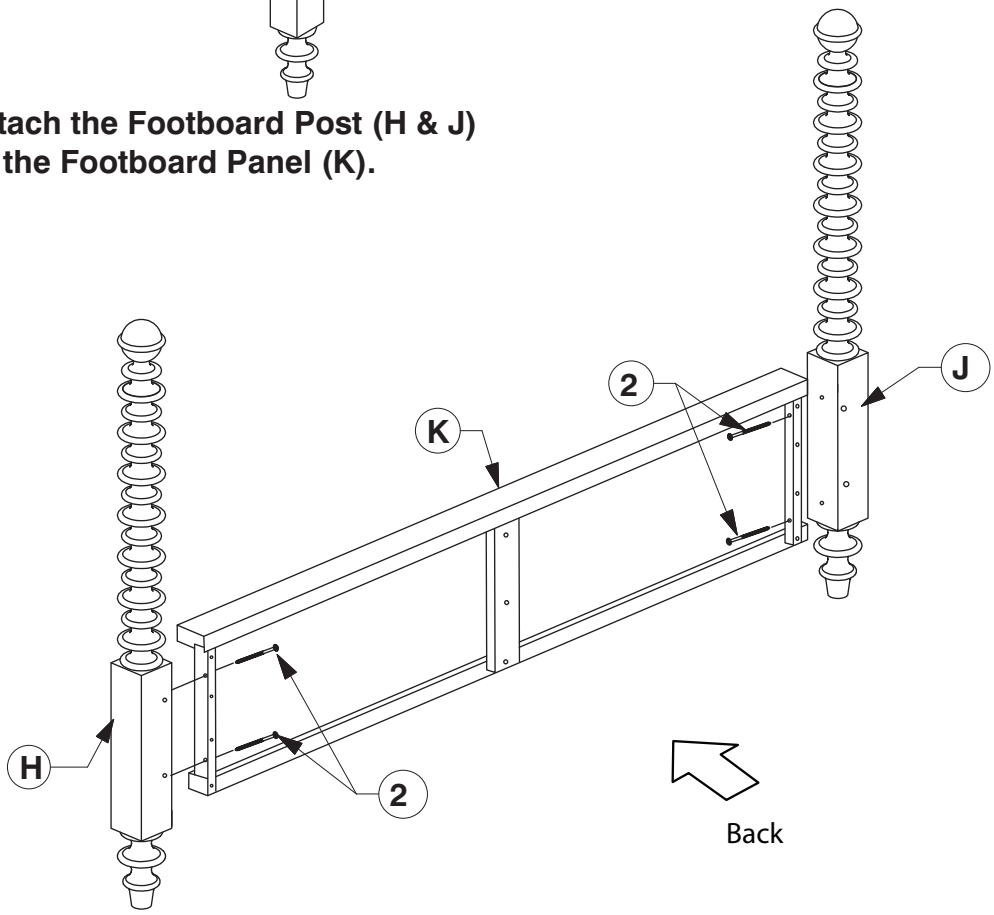

10 **Fit the Center Rail Bracket (6) to the Headboard Support (B).**

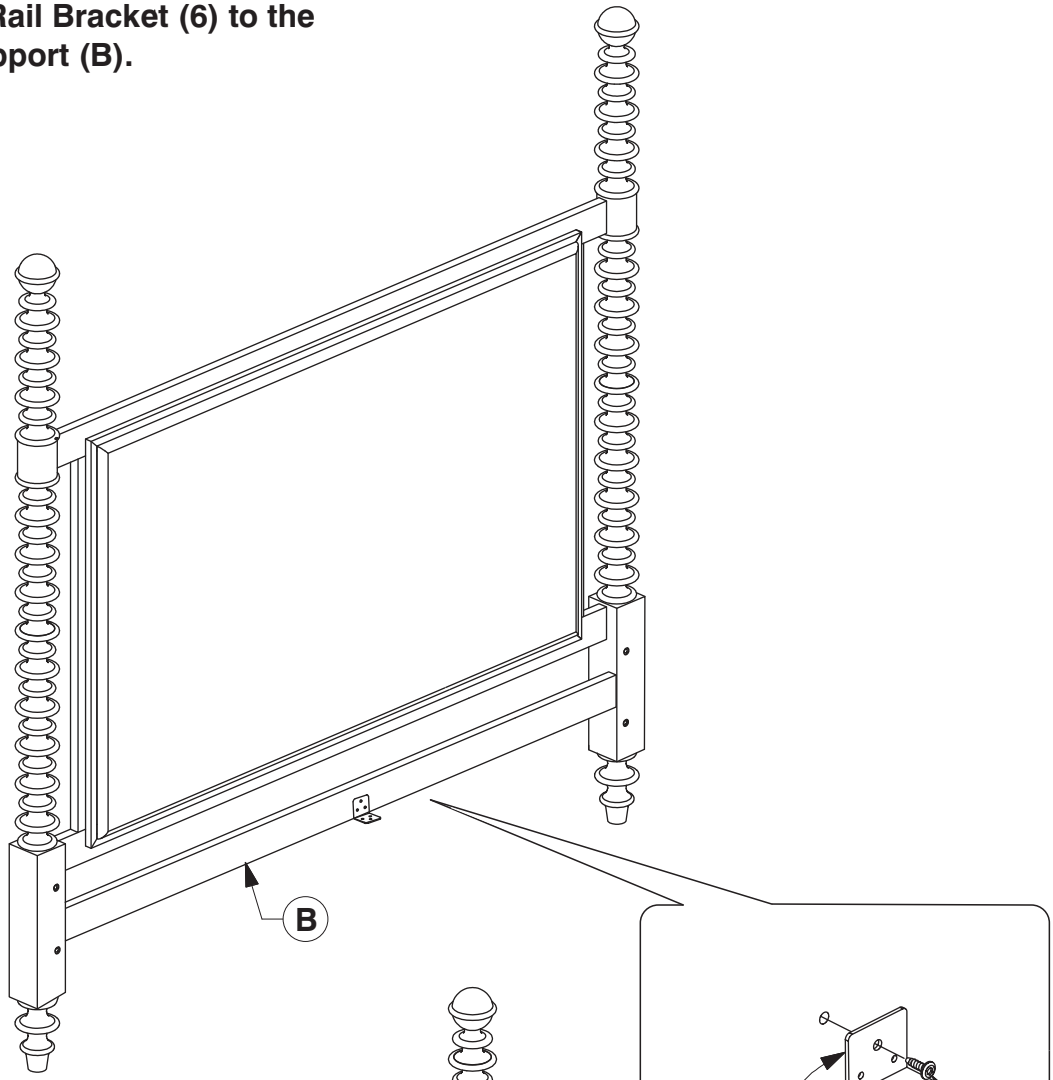

11 **Fit the Center Rail Bracket (6) to the Footboard Panel (K).**

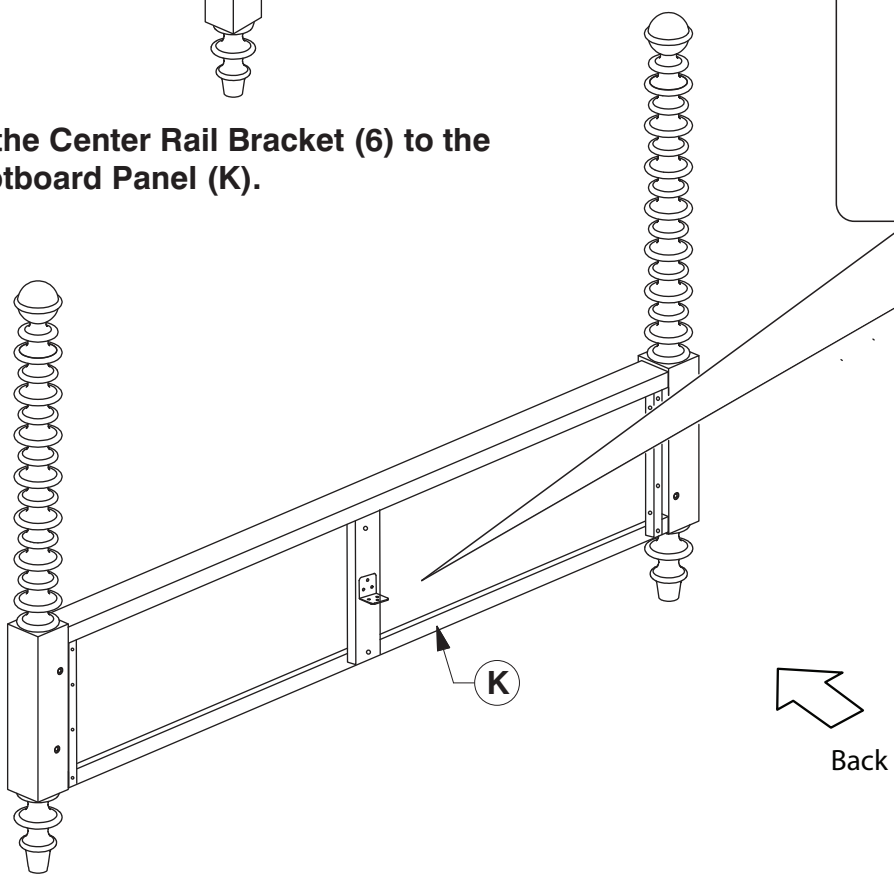

12 Assemble the Side Rail (L) to the Head / Footboard.

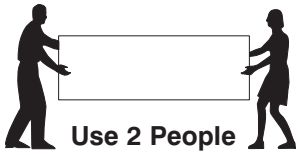

Head / Footboard

2

L

Headboard

L

L

Footboard

13 Bolt the Long Support (M) to the Center Rail Brackets on the Headboard/Footboard.

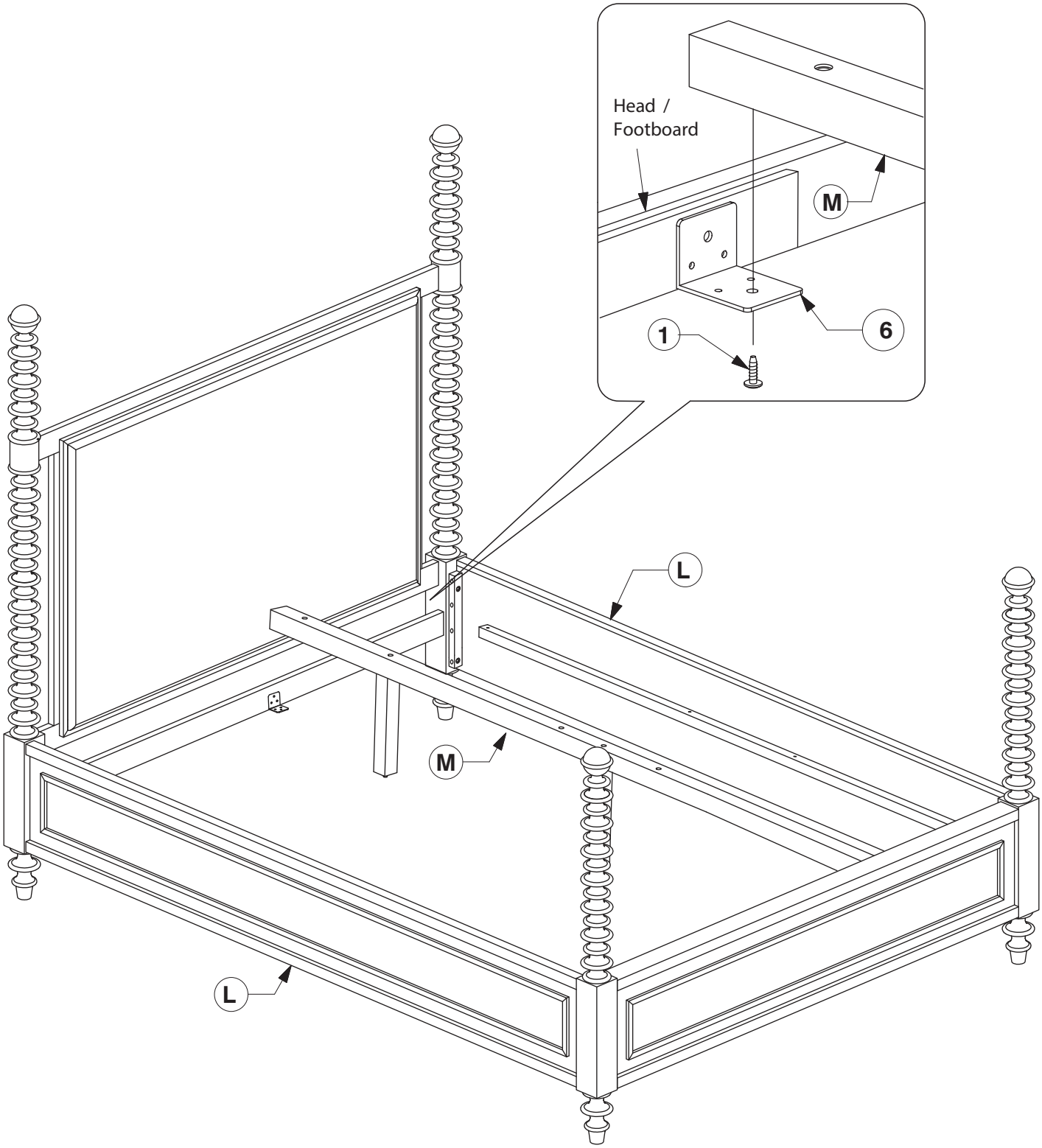

14 Bolt & Screw the Bed Slats (O) to the Side Rail (L) and Long Support (M).

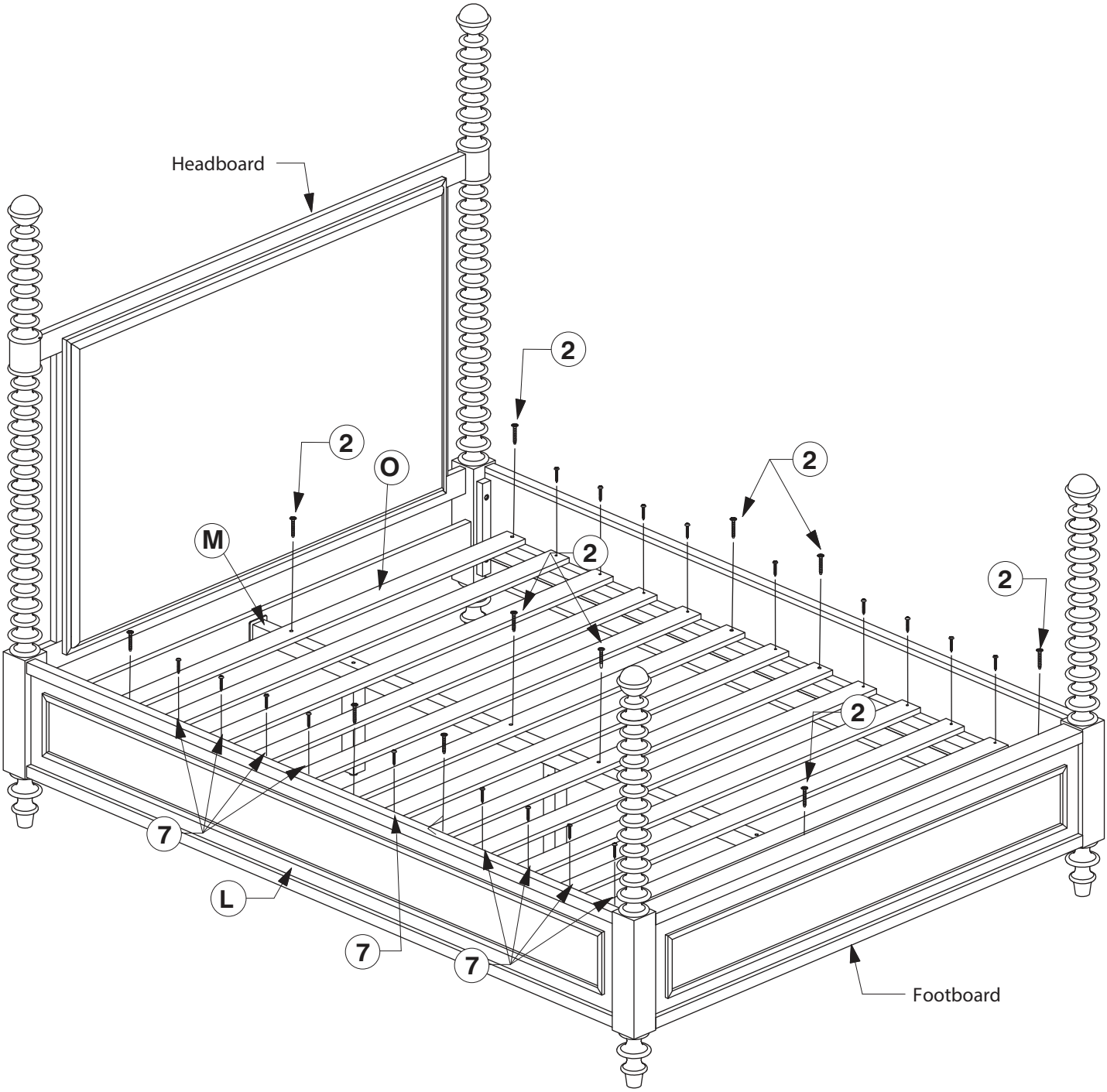

9029 7 Drawer Dresser

Assembly Instructions

WI-0426

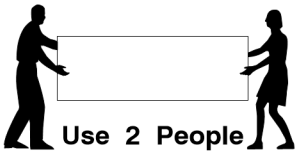

Note: Do not assemble using power tools. This can cause the bolts to be overtightened

1 Parts List

Parts in Box A:

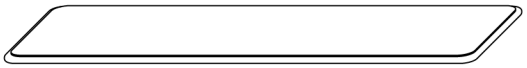

A Top Panel **x 1**

B Front Upper Support Bar **x 1**

C Front Bottom Support Bar **x 1**

D Front Upper Drawer Support Bar **x 1**

E Front Bottom Drawer Support Bar **x 1**

F Rear Upper Support Bar **x 2**

G Rear Bottom Support Bar **x 2**

H Center Post **x 1**

J Back Panel **x 3**

Upper Drawers

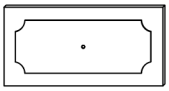

K Drawer Face **x 3**

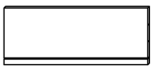

L Drawer Back **x 3**

M Drawer Bottom **x 3**

Lower Drawers

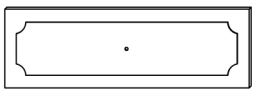

N Drawer Face **x 4**

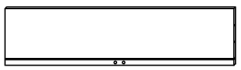

O Drawer Back **x 4**

P Drawer Bottom **x 4**

Q Drawer Rail **x 4**

9029 7 Drawer Dresser

Assembly Instructions

WI-0426

1 Parts List

Parts in Box B:

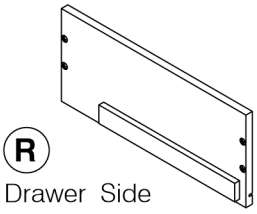

R
Drawer Side
(Left Hand) **x 7**

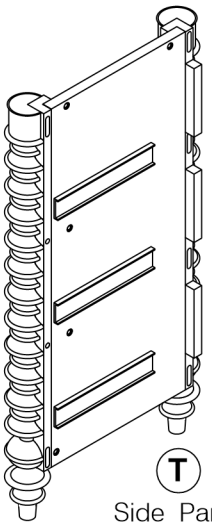

T
Side Panel
(Left Hand) **x 1**

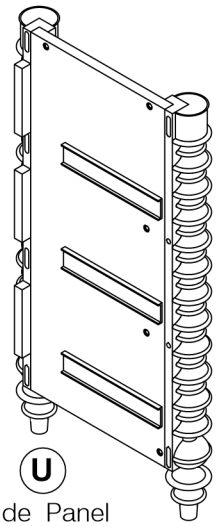

U
Side Panel
(Right Hand) **x 1**

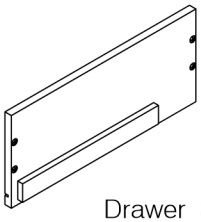

S
Drawer Side
(Right Hand) **x 7**

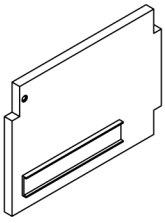

V
Center Panel
(Upper) **x 2**

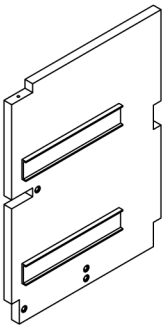

W
Center Panel
(Lower) **x 1**

2 Hardware List

1 M6 x 15mm JCB **x 28**

2 M6 x 40mm JCB **x 12**

3 M6 x 50mm JCB **x 2**

4 M6 JNC Nut **x 4**

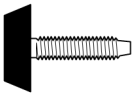

5 Adjustable Foot **x 1**

6 'L' Bracket (5005-3) **x 16**

7 Wood Screw (M4 x 20mm) **x 28**

8 Wood Screw (M4 x 25mm) **x 64**

9 M4 x 32mm Wood Screw **x 30**

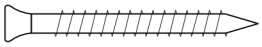

10 CSK Cap Wood Screw (M6 x 60mm) **x 9**

11 Handle (9029) **x 7**

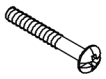

12 M4 x 22mm Wood Screw **x 7**

13 M6 x 25mm Wood Dowel **x 16**

14 M8 x 30mm Wood Dowel **x 4**

15 Long Allen Key **x 1**

❸ Assemble the Upper Drawers.

STEP 3.1

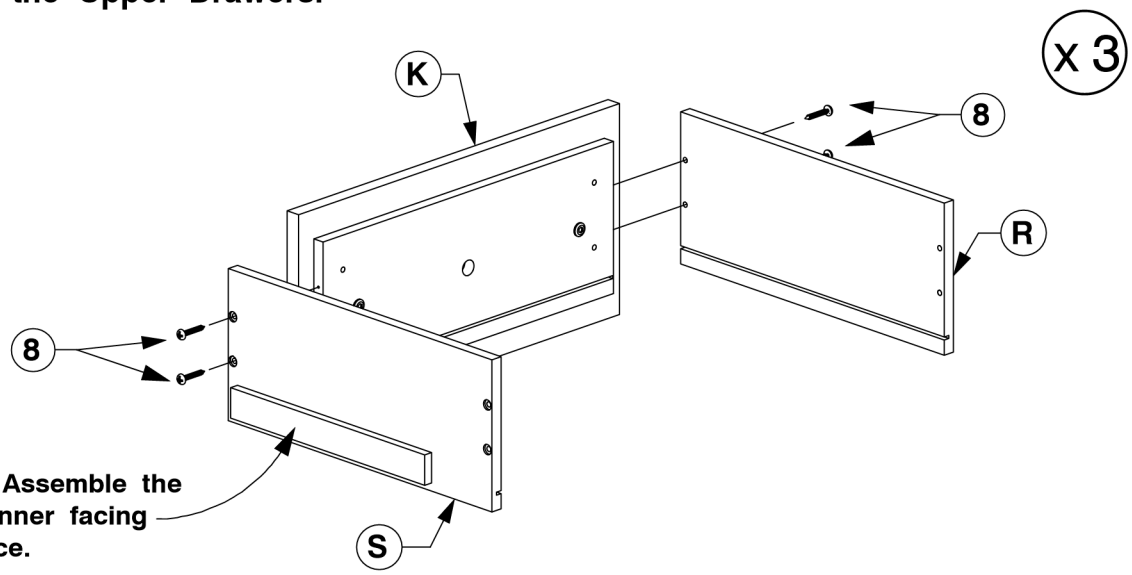

Important: Assemble the Drawer Runner facing Drawer Face.

STEP 3.2

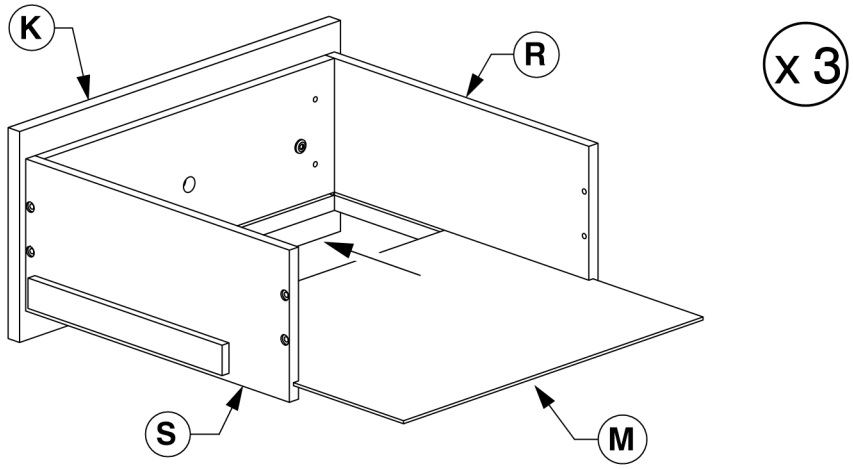

STEP 3.3

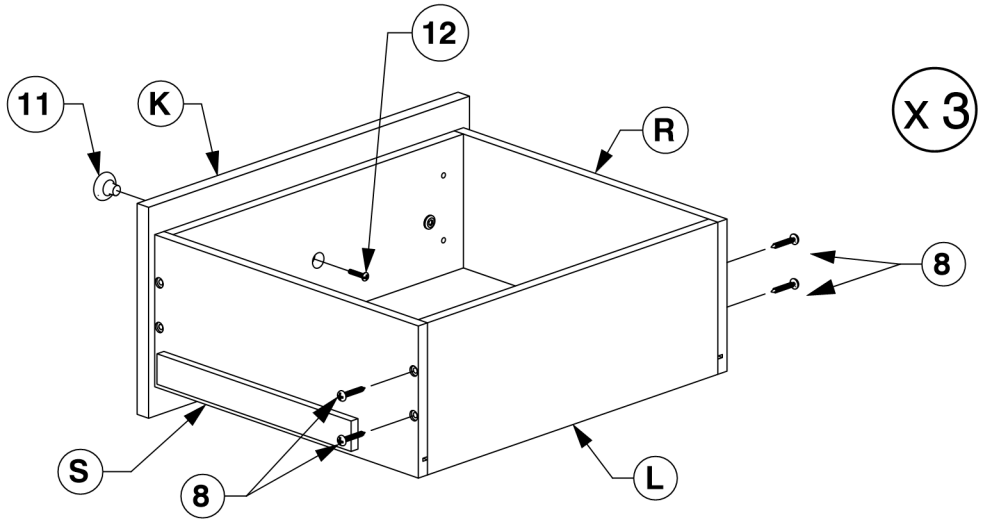

❸ Assemble the Lower Drawers.

STEP 3.4

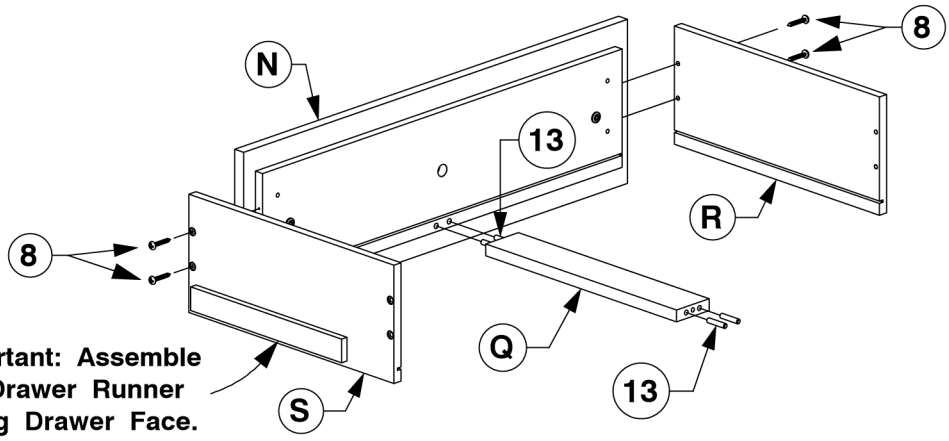

Important: Assemble the Drawer Runner facing Drawer Face.

x 4

STEP 3.5

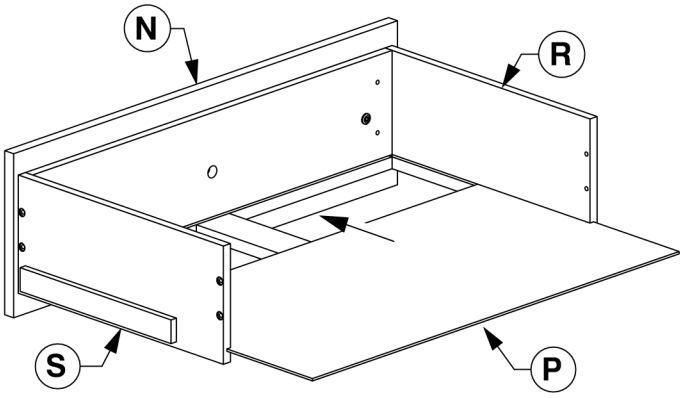

x 4

STEP 3.6

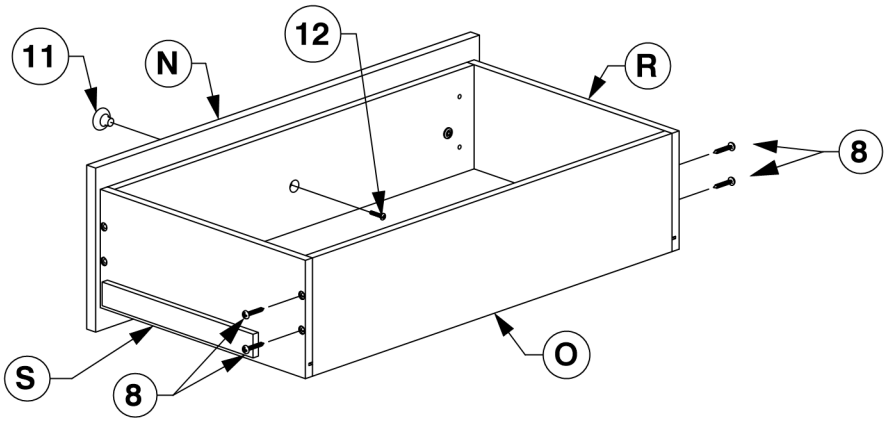

x 4

STEP 3.7

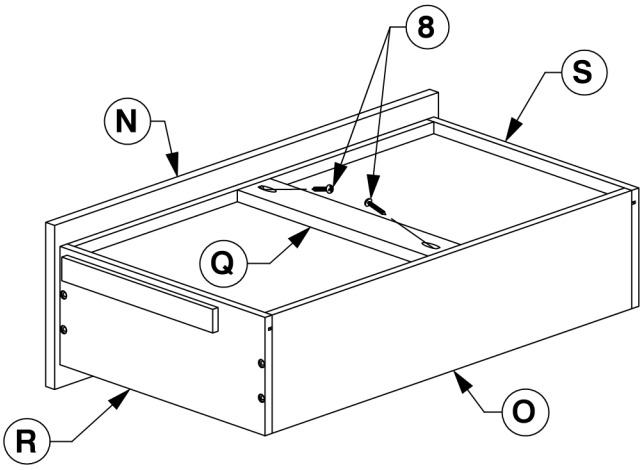

x 4

4 **Fit the 'L' Bracket to the Top Panel (A).**

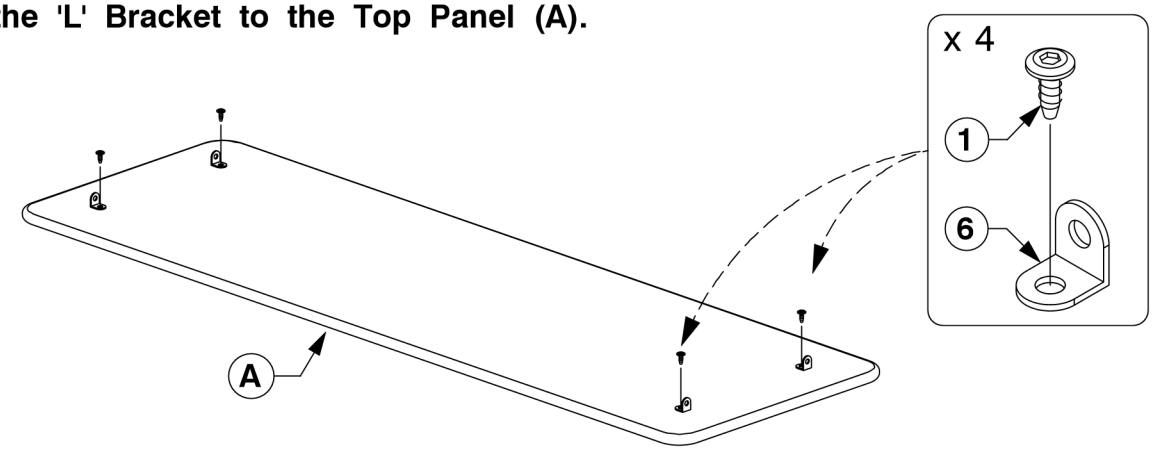

5 **Attach 'L' Bracket (6) to the Upper and Lower Center Panels (V & W) using JNC (4) and Bolts (1).**

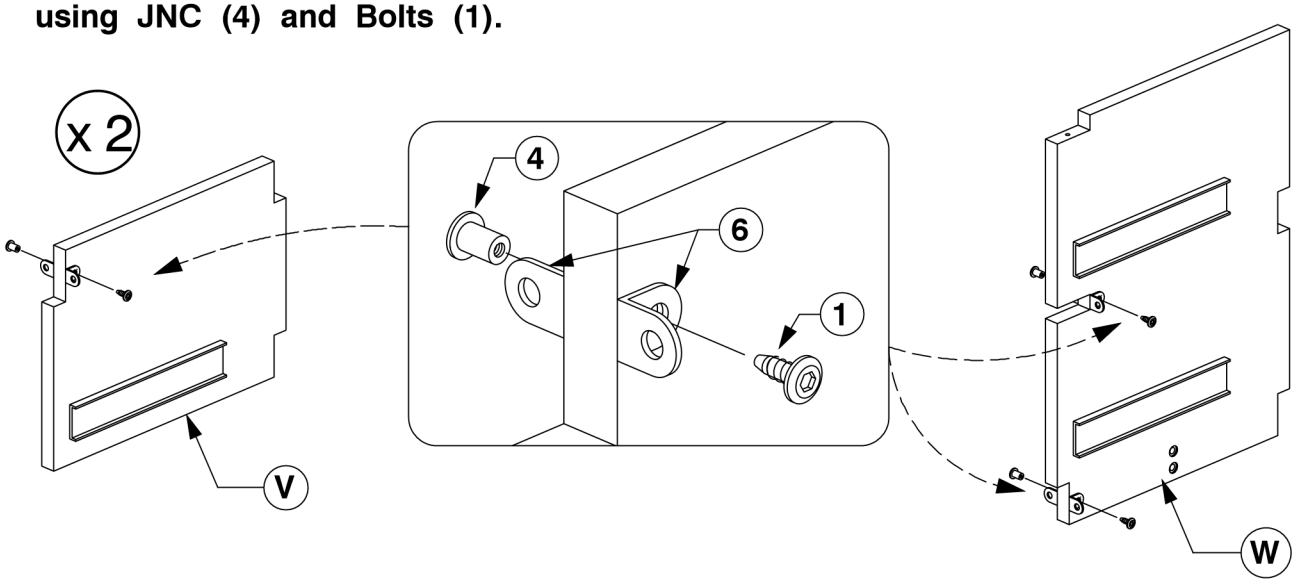

6 **Insert Dowels (14) into the ends of Support Bars (D & E). Then attach Brackets (6) to the Support Bars using Bolts (1).**

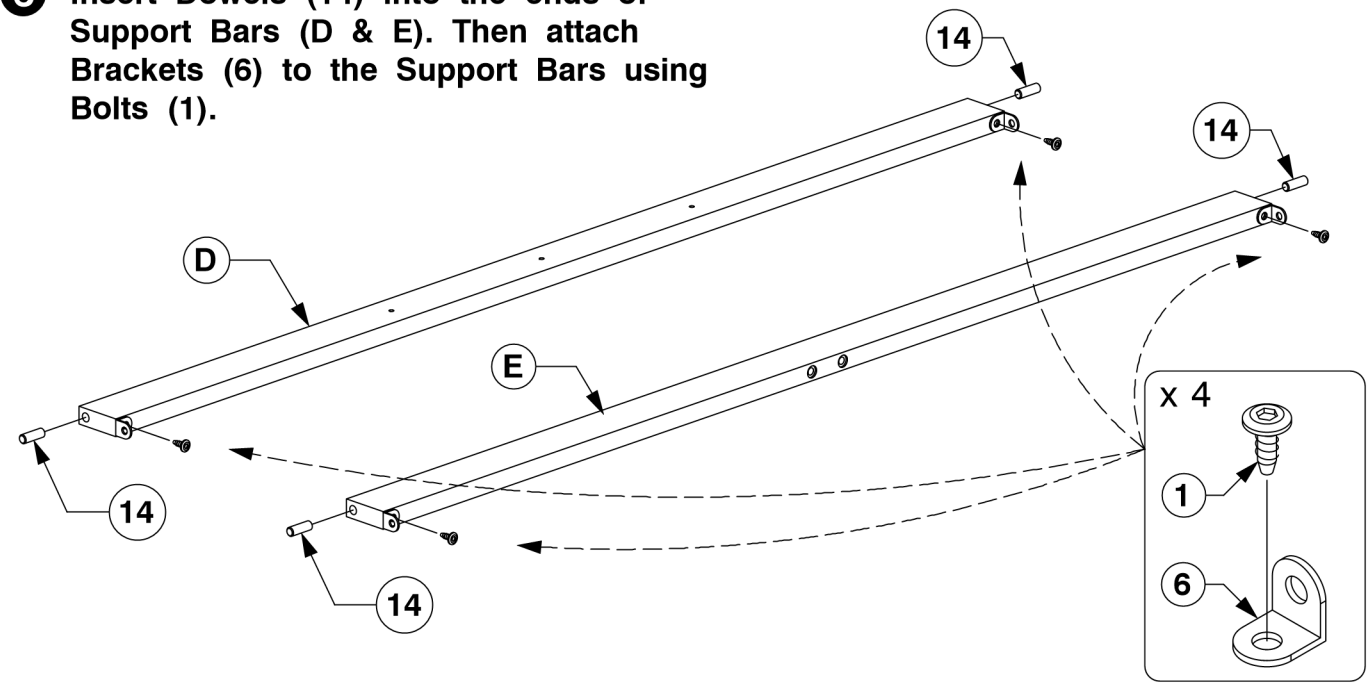

7 Fit the Right Side Panel (U) to the Top Panel (A).

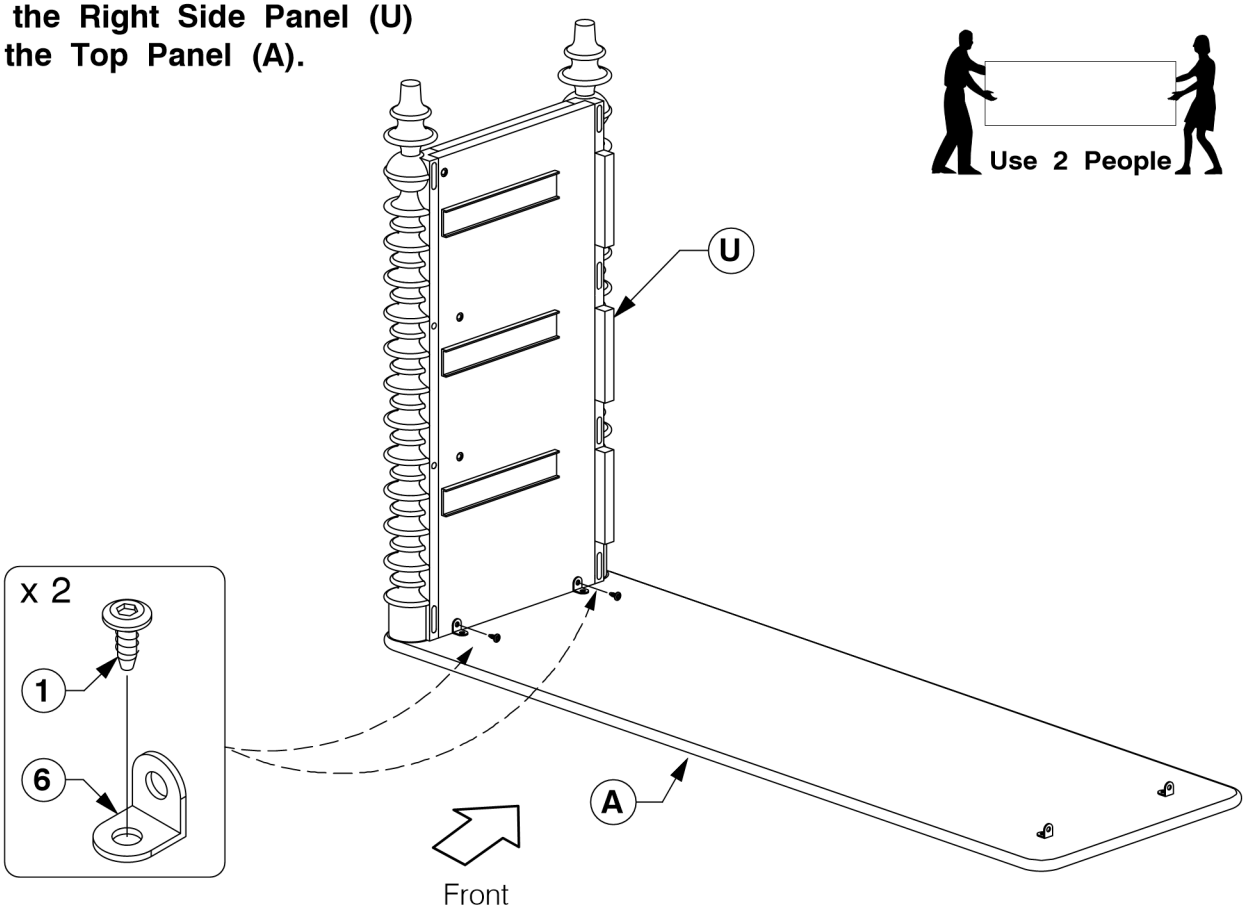

8 Assemble the Support Bar (B & F) to the Right Side Panel (U).

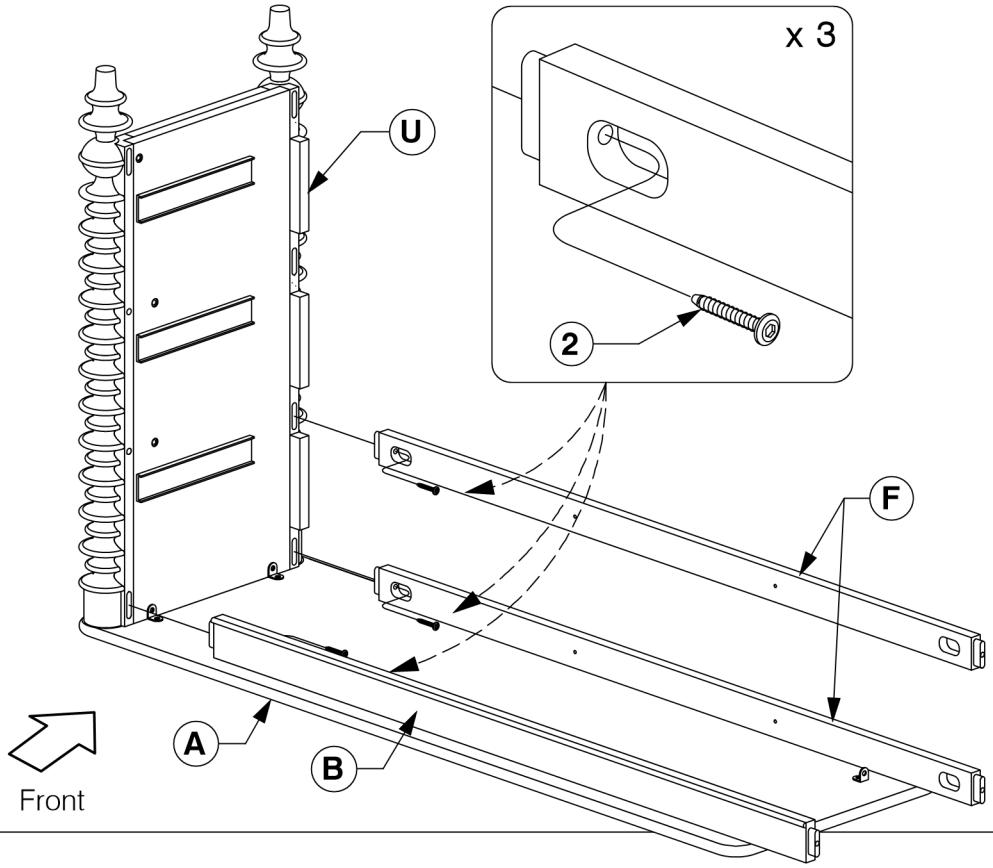

Step 1

Use the ***ball end*** of Allen key to start the bolt.

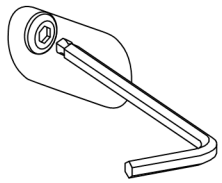

Step 2

Tighten fully with the ***straight end.***

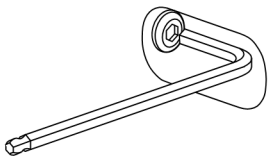

9 **Assemble the Center Panel (V) to Support Bar (B & F).**

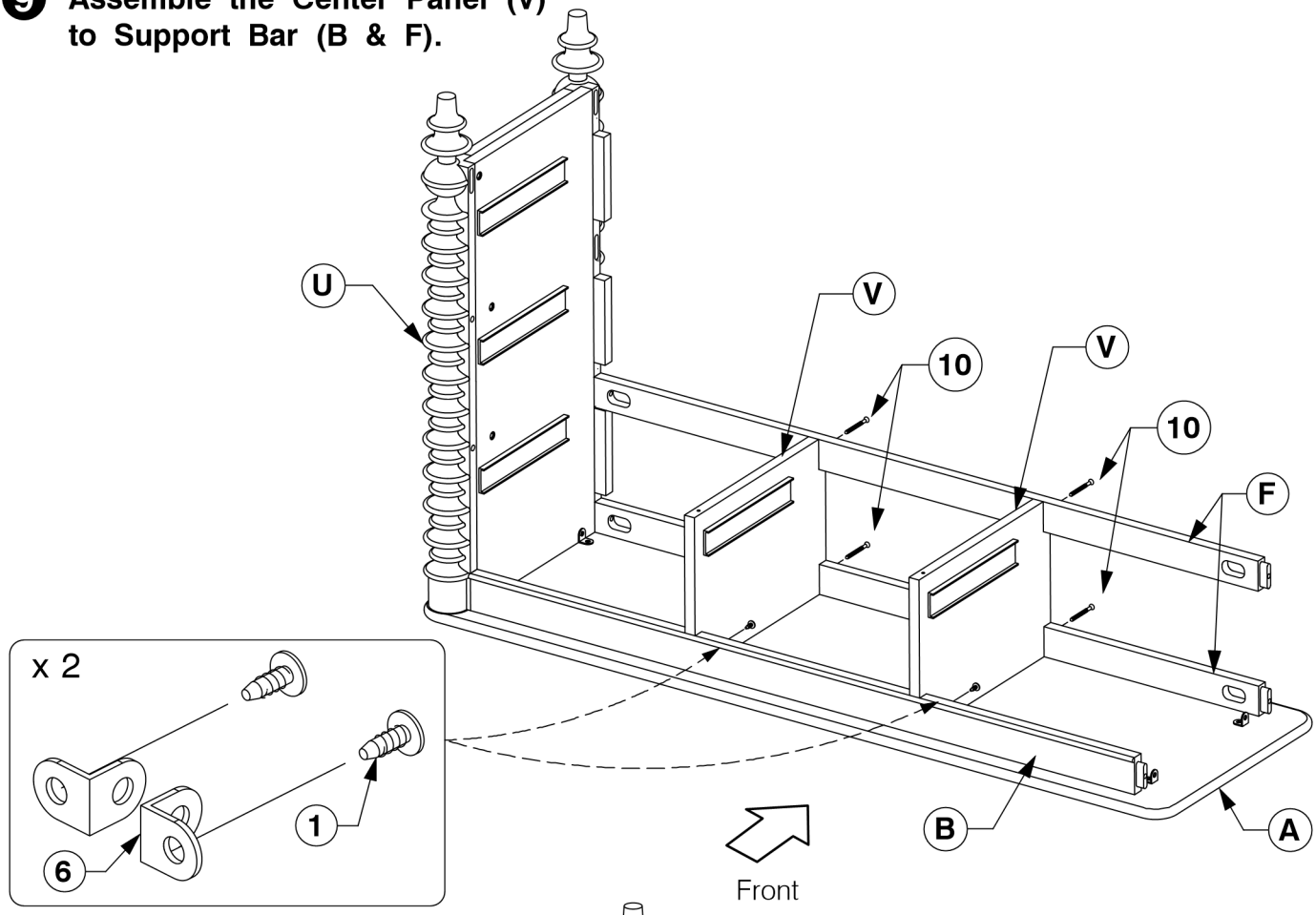

10 **Attach Support Bars (D & E) to the Right Side Panel (U). Then tighten using Bolts.**

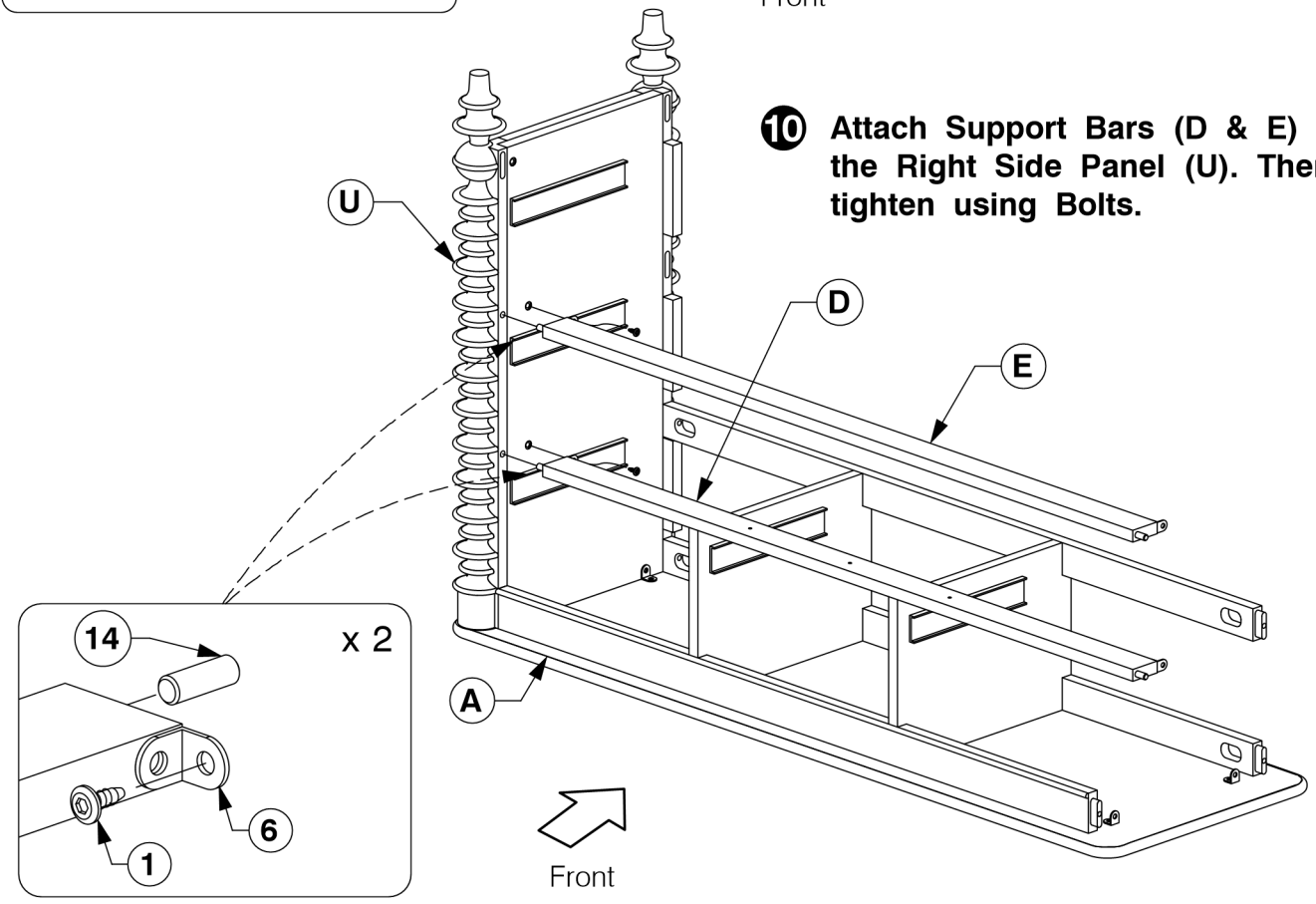

11 Assemble the Center Panel (W) to Support Bar (D, E, & F).

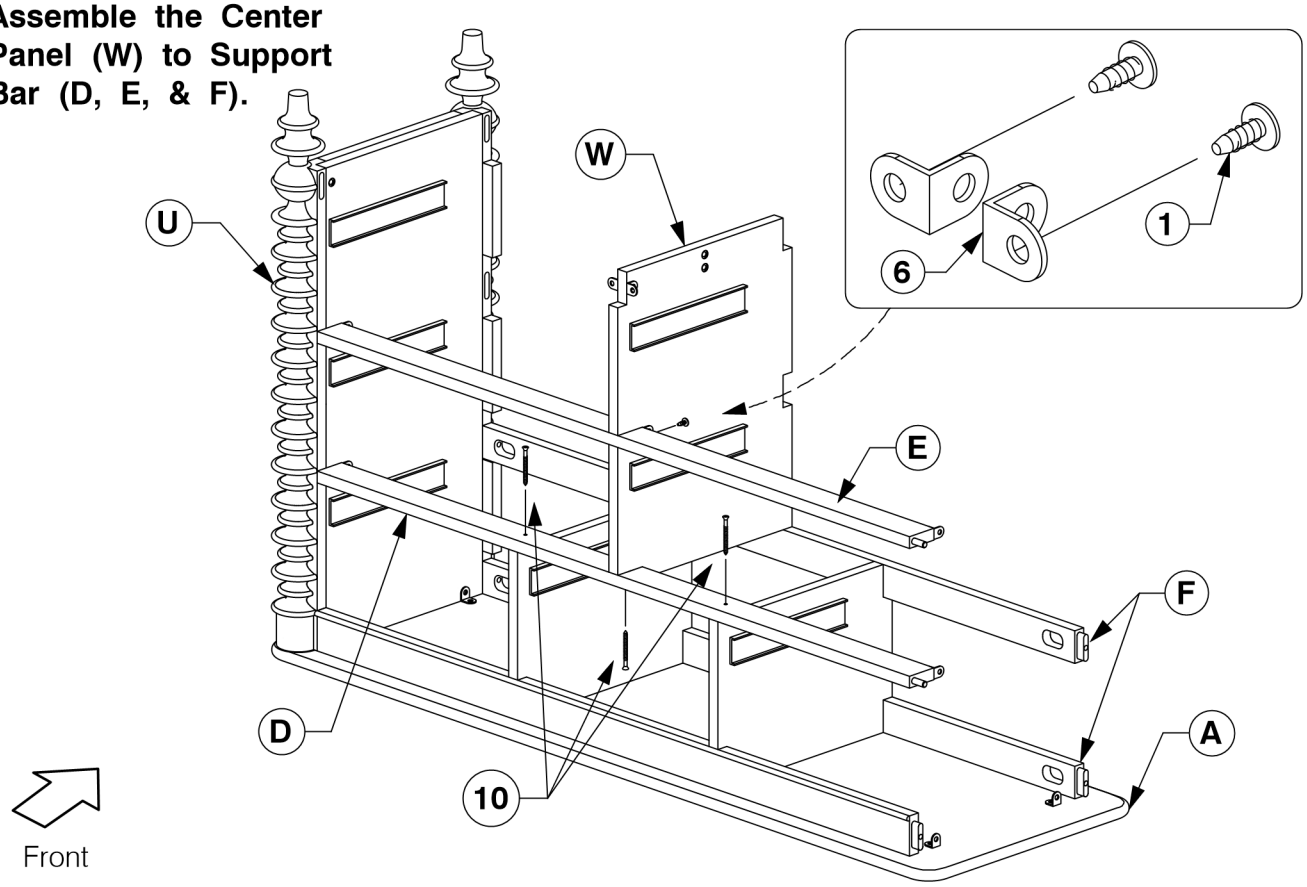

12 Fit the Support Bars (G) to the Center Panel (W).

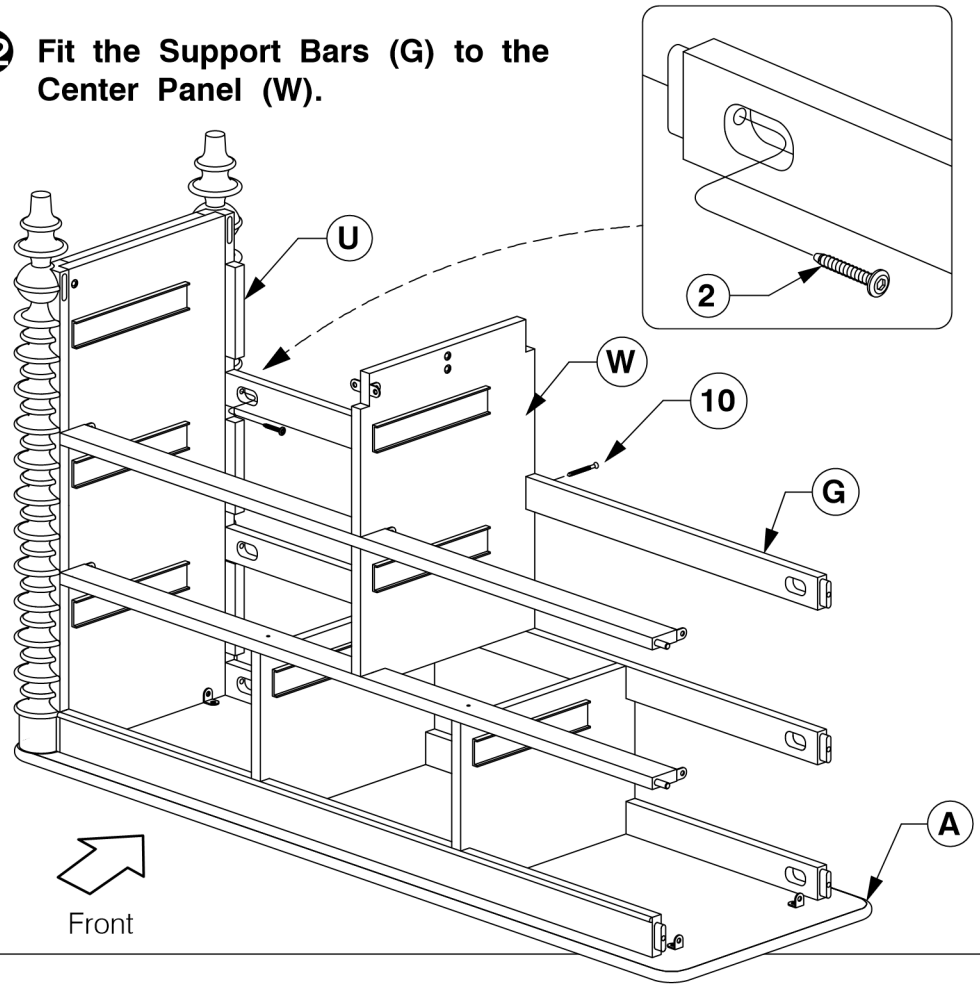

Step 1

Use the ***ball end*** of Allen key to start the bolt.

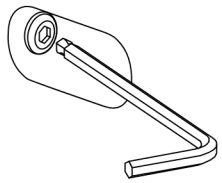

Step 2

Tighten fully with the ***straight end.***

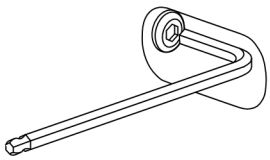

13 Attach the Support Bar (C & G) to the Right Side Panel (U) & Center Panel (W).

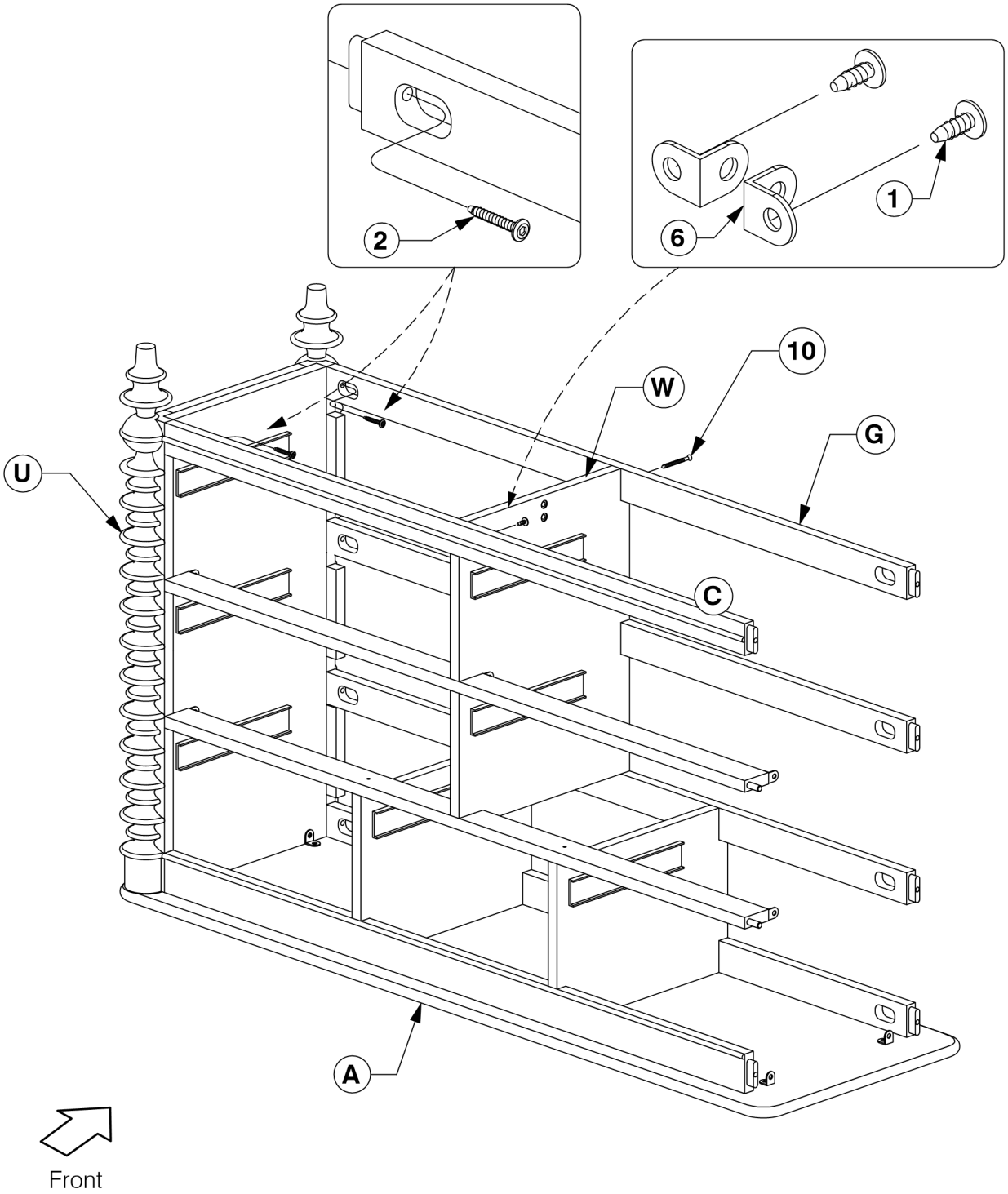

Step 1

Use the ***ball end*** of Allen key to start the bolt.

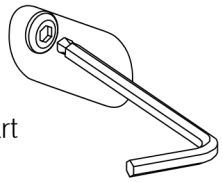

Step 2

Tighten fully with the ***straight end***.

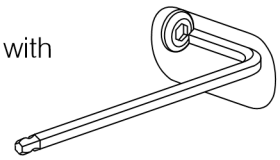

14 Assemble the Left Side Panel (T) to the Support Bars (B, C, D, E, F & G).

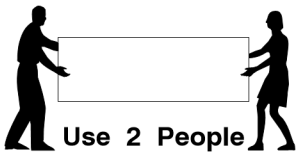

x 6

2

T

G

C

E

G

F

D

F

14

x 2

B

A

6

1

Front

Step 1

Use the ***ball end*** of Allen key to start the bolt.

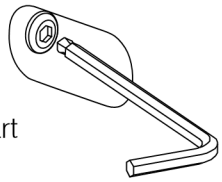

Step 2

Tighten fully with the ***straight end***.

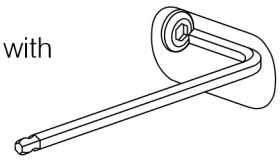

15 Tighten the bolts as shown.

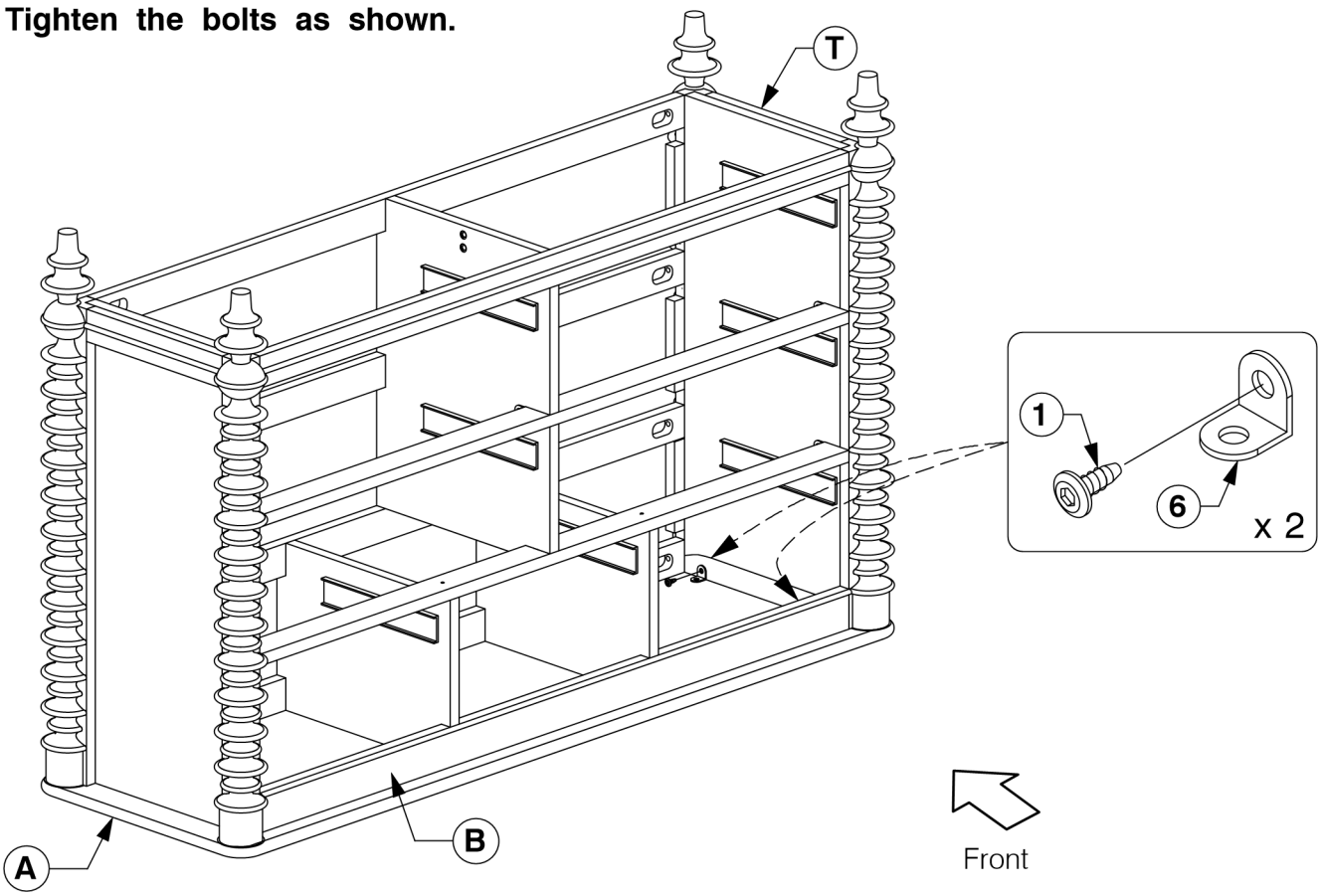

16 Fix the Adjustable foot to the botom of the Center Post (H).
Fit the Center Post (H) to the Center Panel (W).

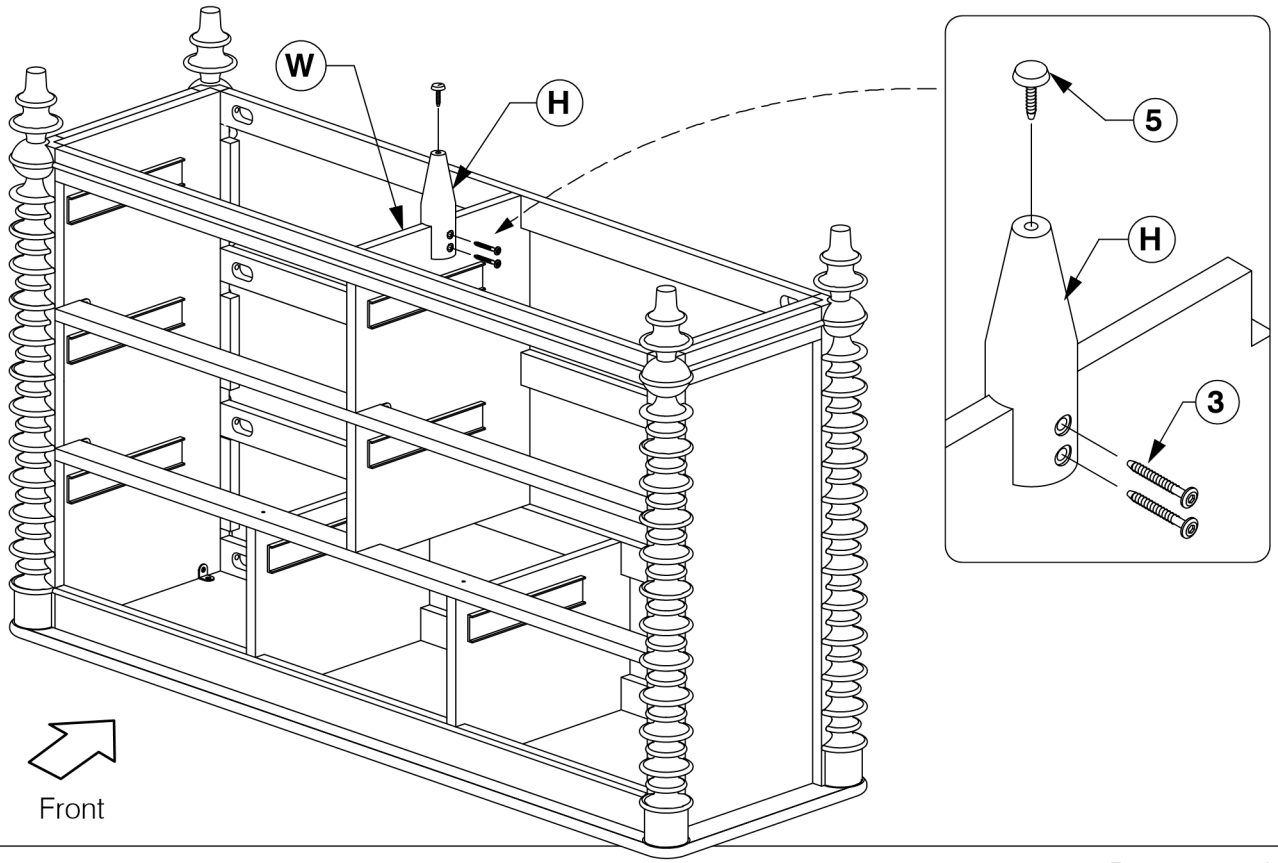

17 Attached the Back Panel (J) to the back of the frame.

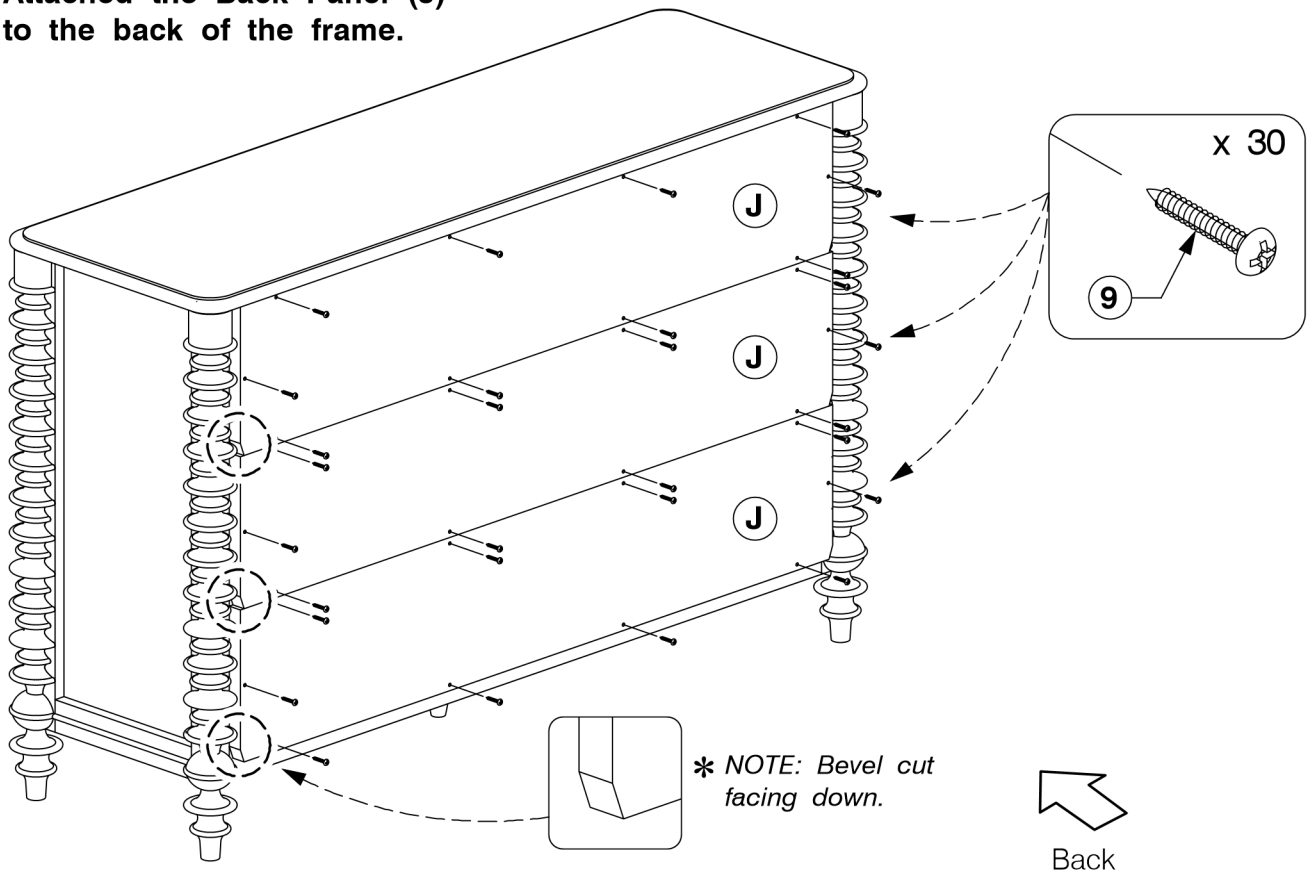

18 Fit the Drawer Box (K & N) to the casegood body.

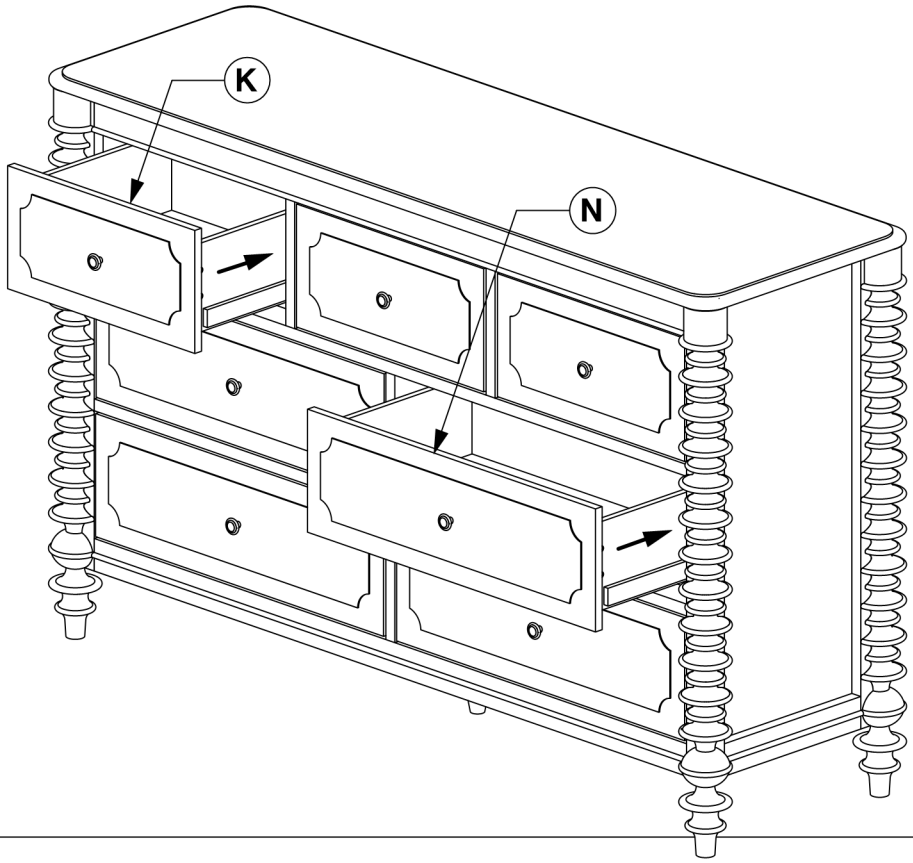

19 Adjust the Drawer Face (K & N).

✻ *NOTE: Before fitting the Wood Screws. Lossen the JCBs on the Drawer Face if the face needs alignment.*

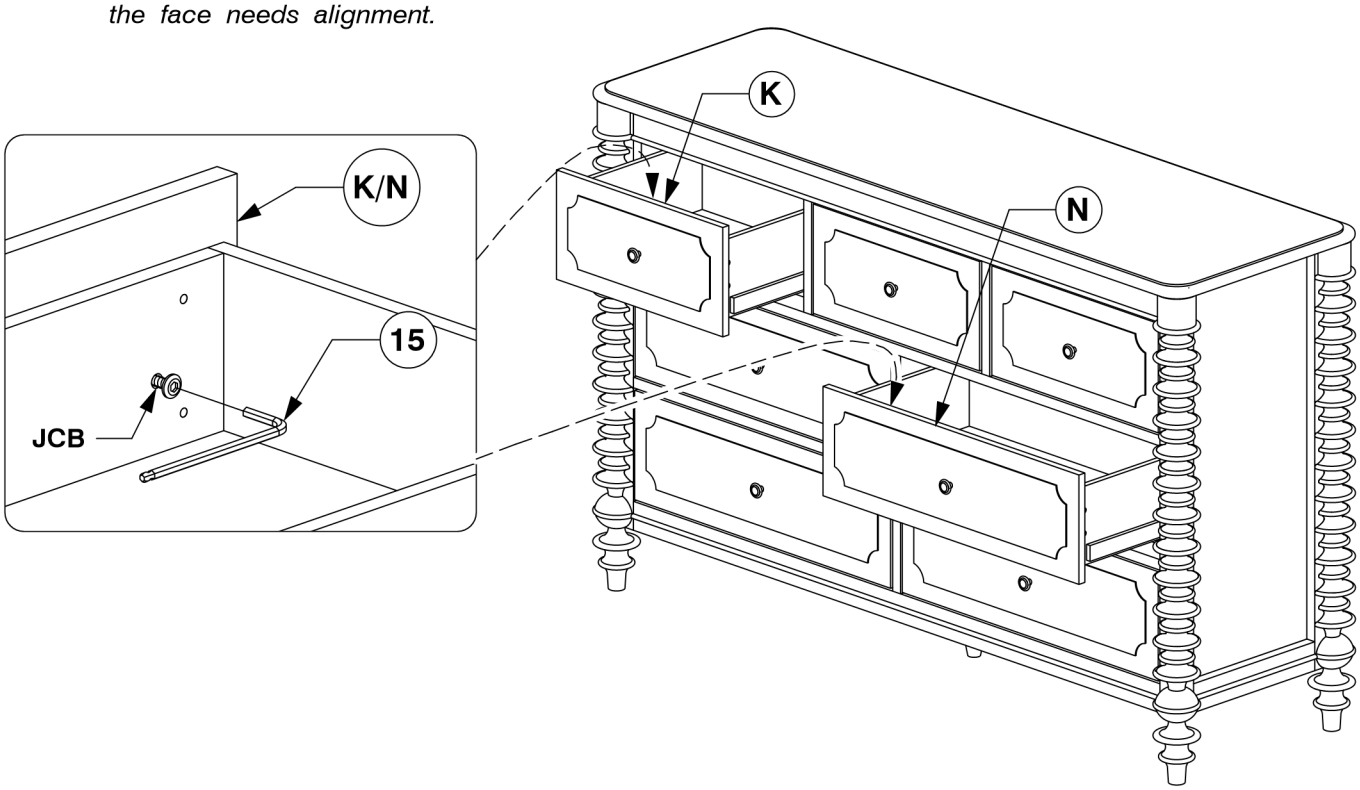

20 After the Drawer Faces (K & N) are aligned, secure with wood screws.

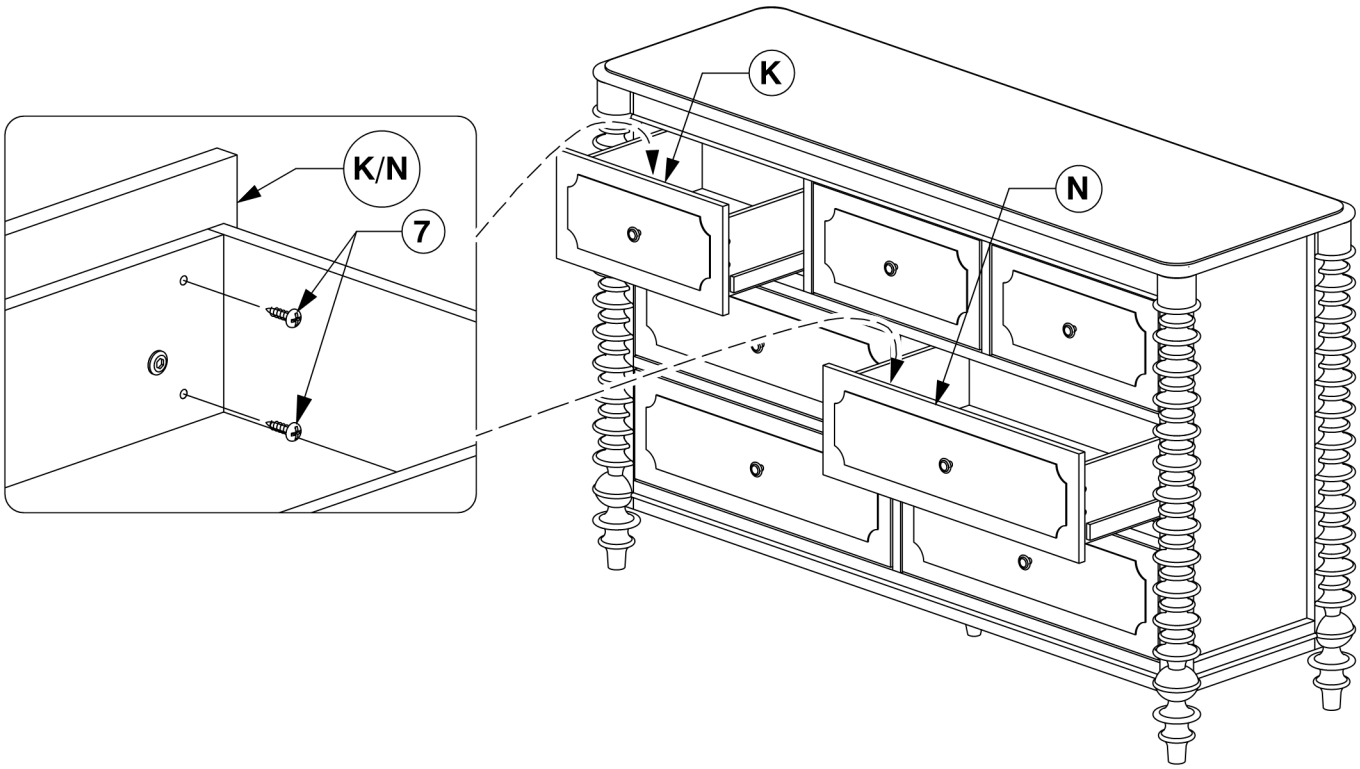

9029 2D Night Stand

Assembly Instructions

WI-0425

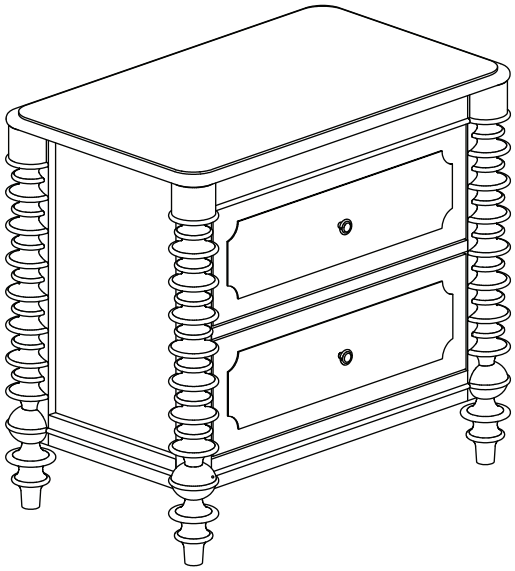

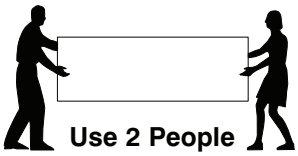

Note: Do not assemble using power tools. This can cause the bolts to be overtightened

1 Parts List

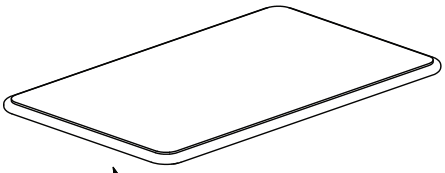

A Top Panel **x 1**

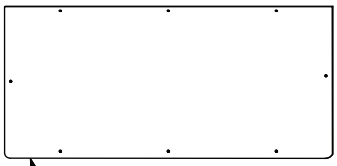

B Back Panel **x 2**

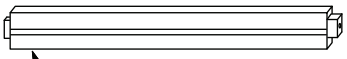

C Front Bottom Support Bar **x 1**

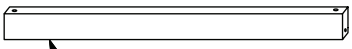

D Front Support Bar **x 1**

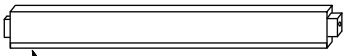

E Front Upper Support Bar **x 1**

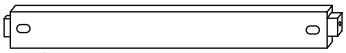

F Rear Support Bar **x 3**

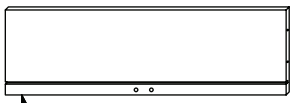

G Drawer Back **x 2**

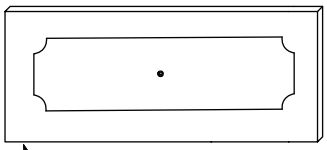

K Drawer Face **x 2**

N Drawer Bottom **x 2**

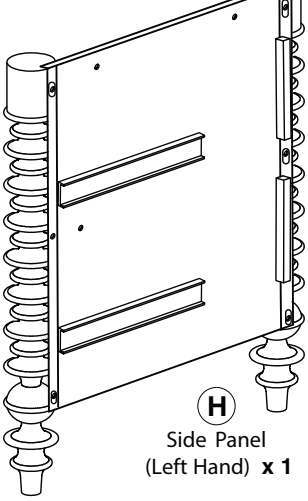

H Side Panel (Left Hand) **x 1**

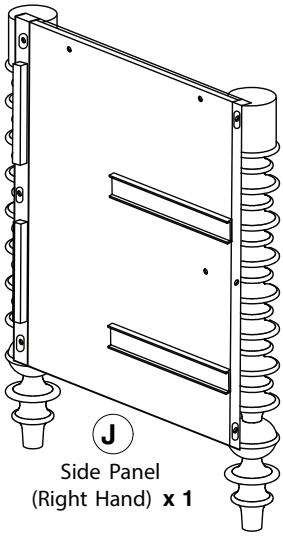

J Side Panel (Right Hand) **x 1**

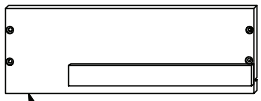

L Drawer Side (Left Hand) **x 2**

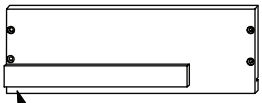

M Drawer Side (Right Hand) **x 2**

P Drawer Rail **x 2**

9029 2D Night Stand

Assembly Instructions

WI-0425

❷ Hardware List

1 M6 x 15mm JCB **x 12**

2 M6 x 40mm JCB **x 10**

3 'L' Bracket (5005-3) **x 6**

4 M8 x 30mm Wood Dowel **x 2**

5 M6 x 25mm Wood Dowel **x 8**

6 M4 x 16mm Wood Screw **x 16**

7 M4 x 20mm Wood Screw **x 8**

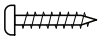

8 M4 x 25mm Wood Screw **x 20**

9 Handle (9029) **x 2**

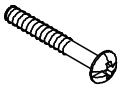

10 M4 x 22mm Wood Screw **x 2**

11 Allen Key **x 1**

❸ Assemble the Drawer Sides (L & M) and Drawer Rail (P) to the Drawer Face (K).

x2

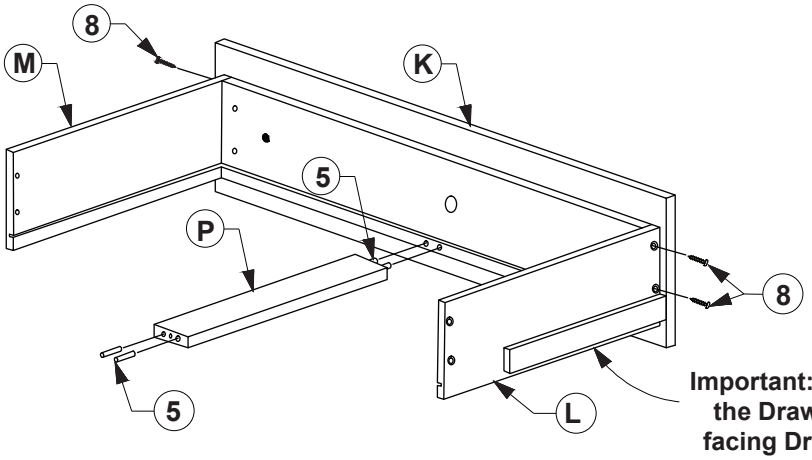

Important: Assemble the Drawer Runner facing Drawer Face.

4 **Slide the Drawer Bottom (N) into the groove on the Drawer Sides (L & M).**

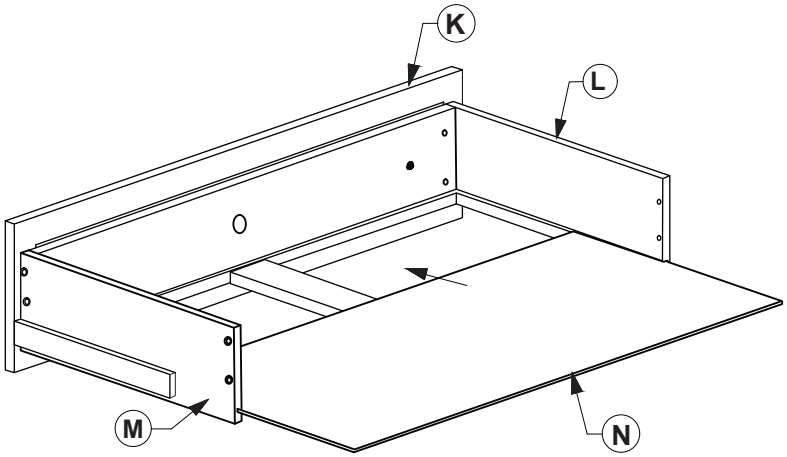

x2

5 **Assemble the Drawer Back (G) to the Drawer Sides (L & M). Fit the Handle to the Drawer Face (K).**

x2

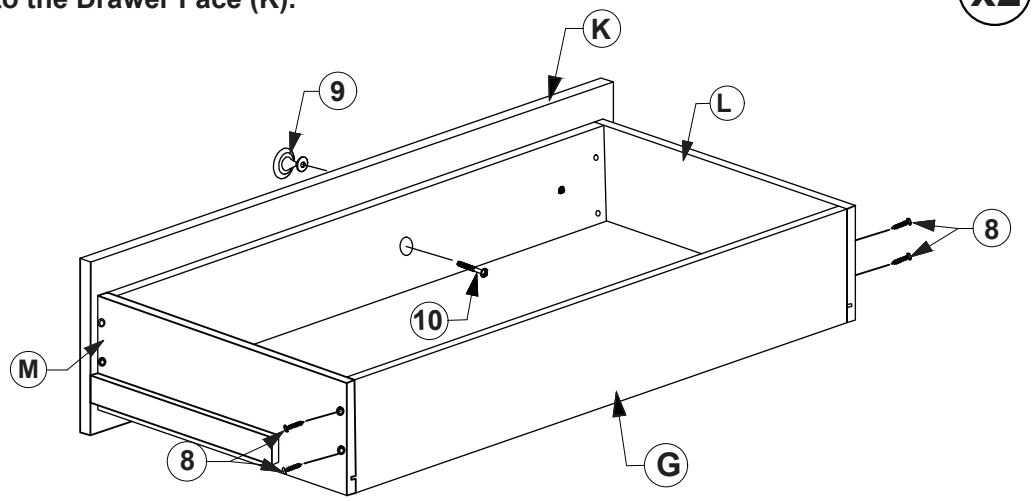

6 **Turn the Drawer over to fit angled 25mm Wood screws (8) to the Drawer Rail (P).**

x2

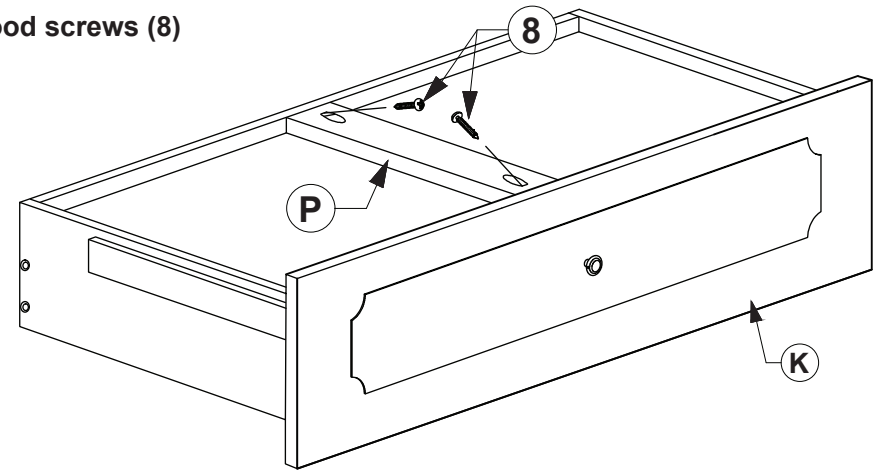

7 **Fit the 'L' Bracket (3) to the Side Panel (H & J).**

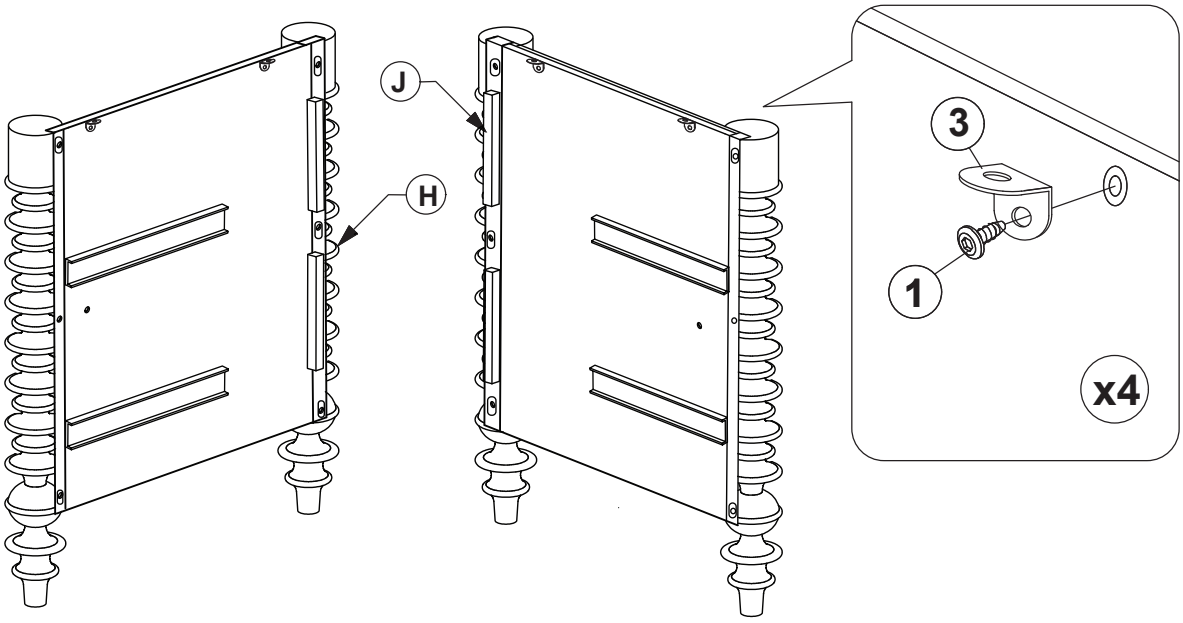

8 **Fit the "L" Braket (3) and Wood Dowel (4) to the Front Support Bar (D).**

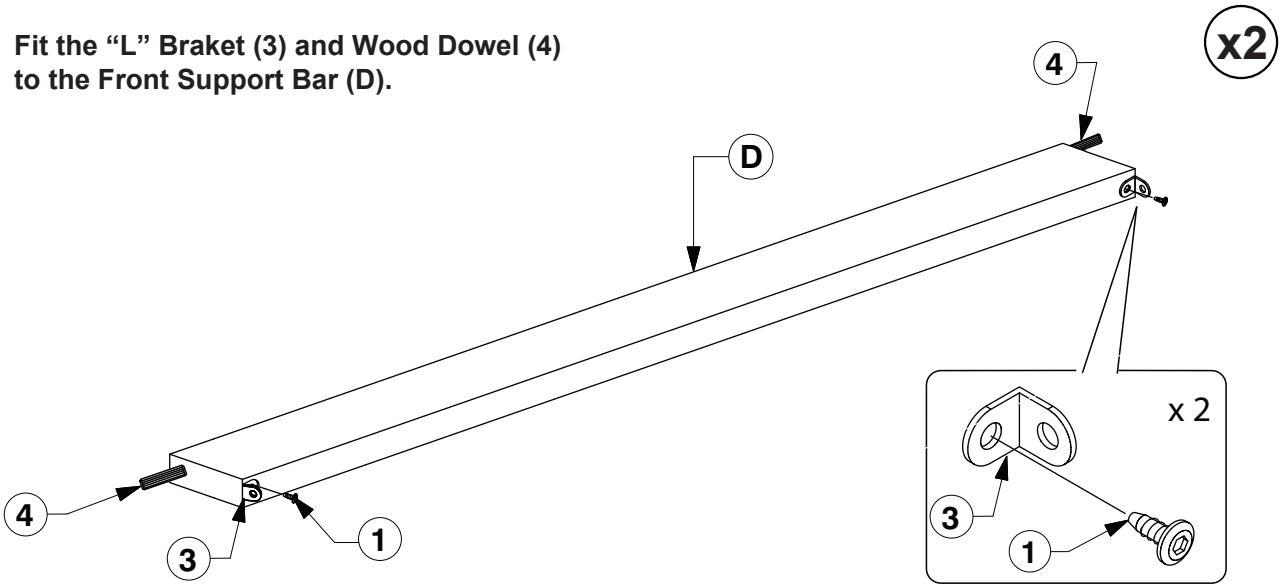

9 Assemble Support Bar (C, D, E & F) to the Side Panel (H).

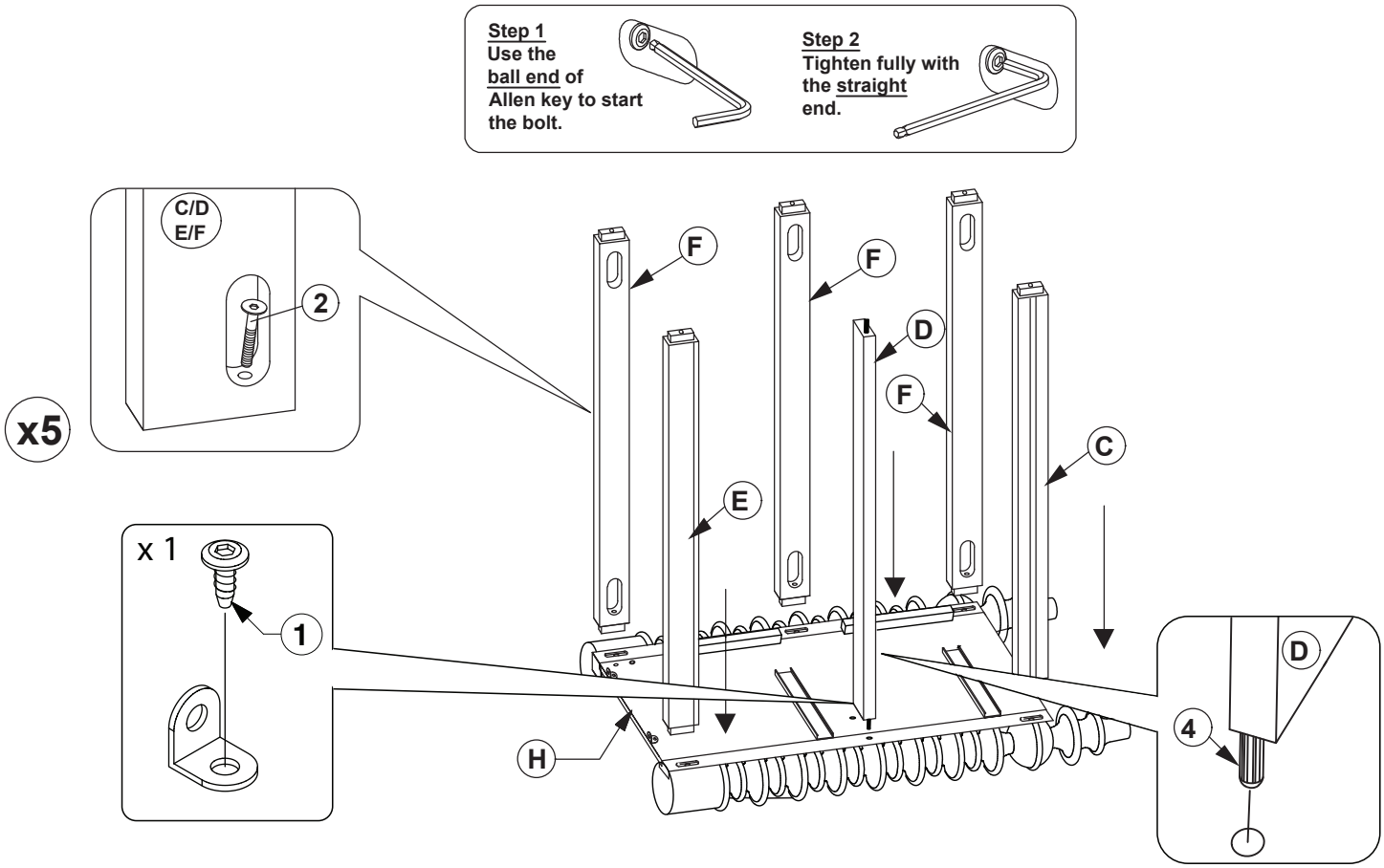

10 Fit the Side Panel (J) to the Support Bar (C, D, E & F).

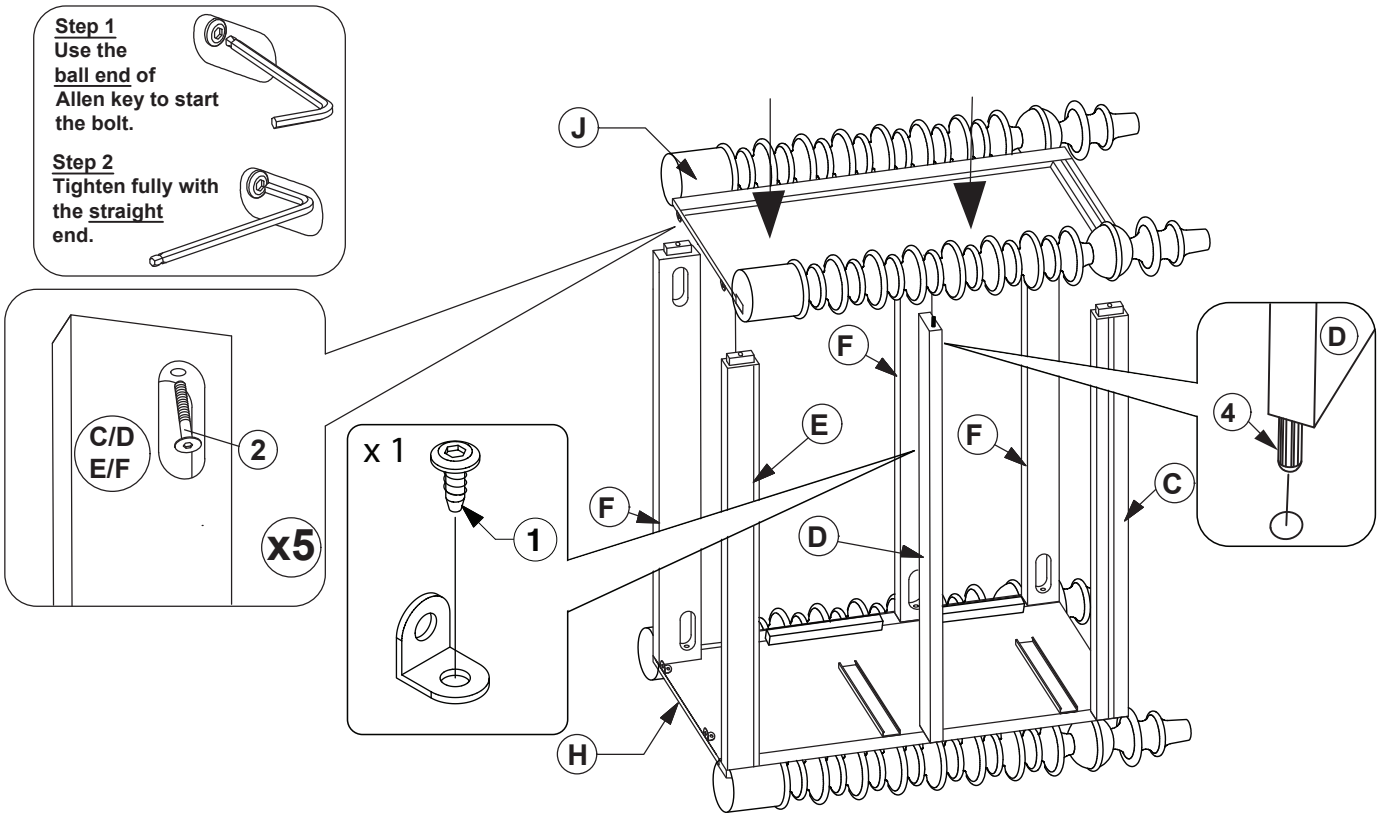

11 Assemble the Side Panel (H & J) to the Top Panel (A).

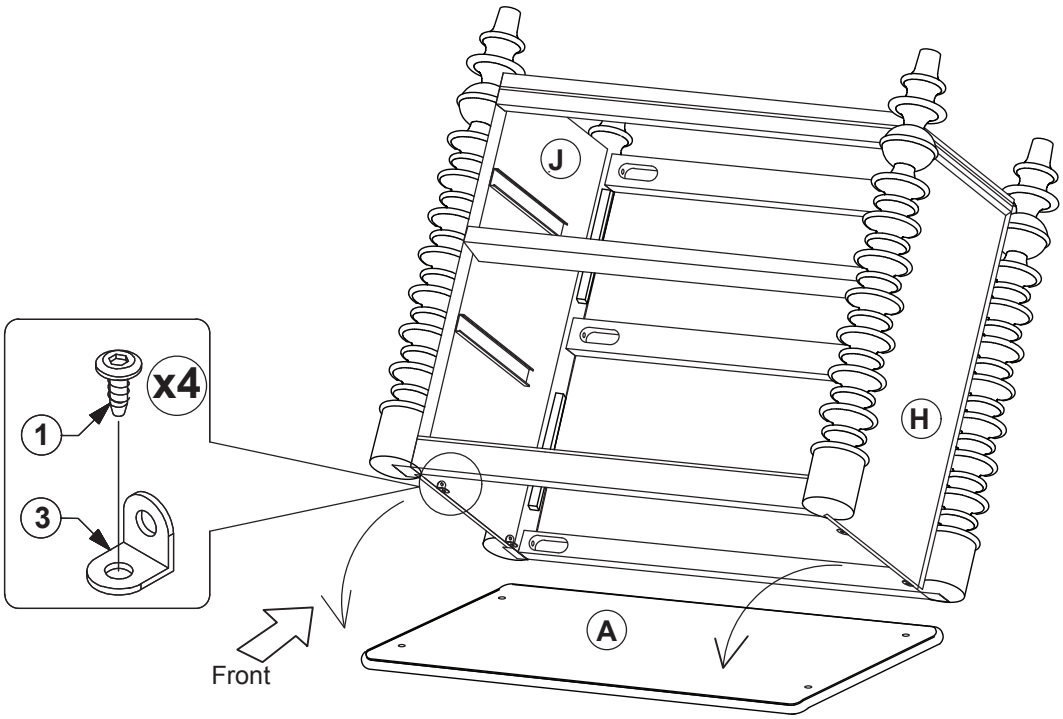

12 Use screw to tighten the Back Panel (B) to the back of the frame.

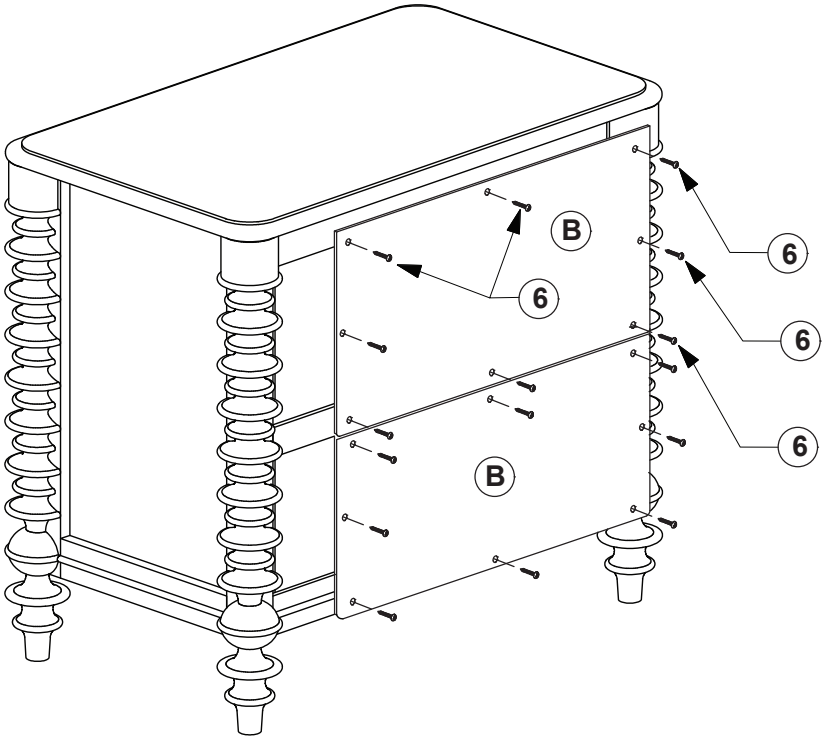

13 Fit the Drawer Face (K) to the casegood body.

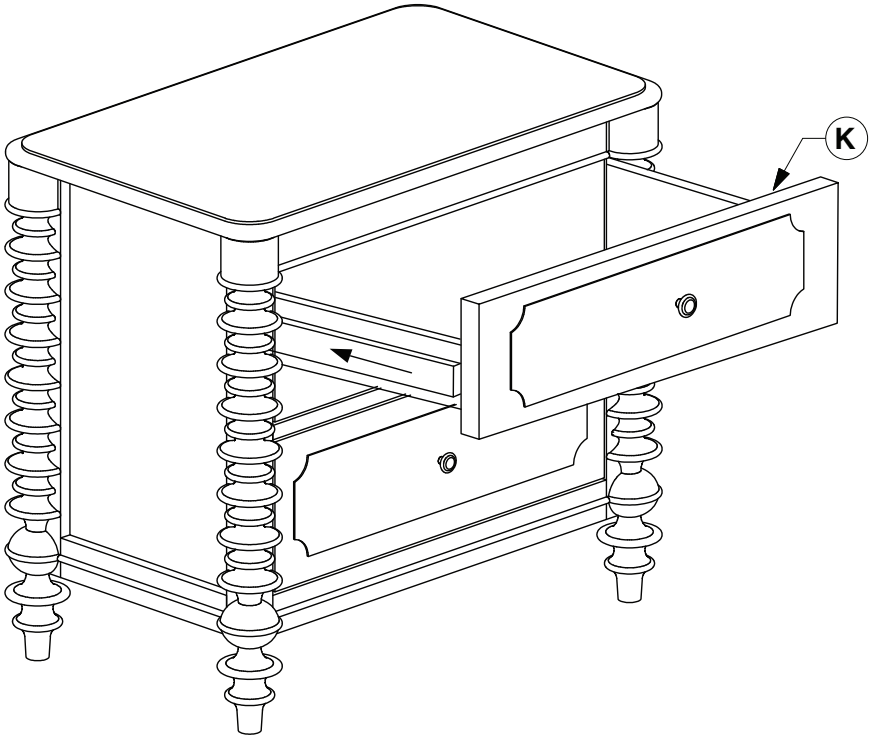

14 Adjust the Drawer Face (K).

✻ NOTE: Before fitting the Wood Screws . Lossen the JCBs on the Drawer Face if the face needs alignment .

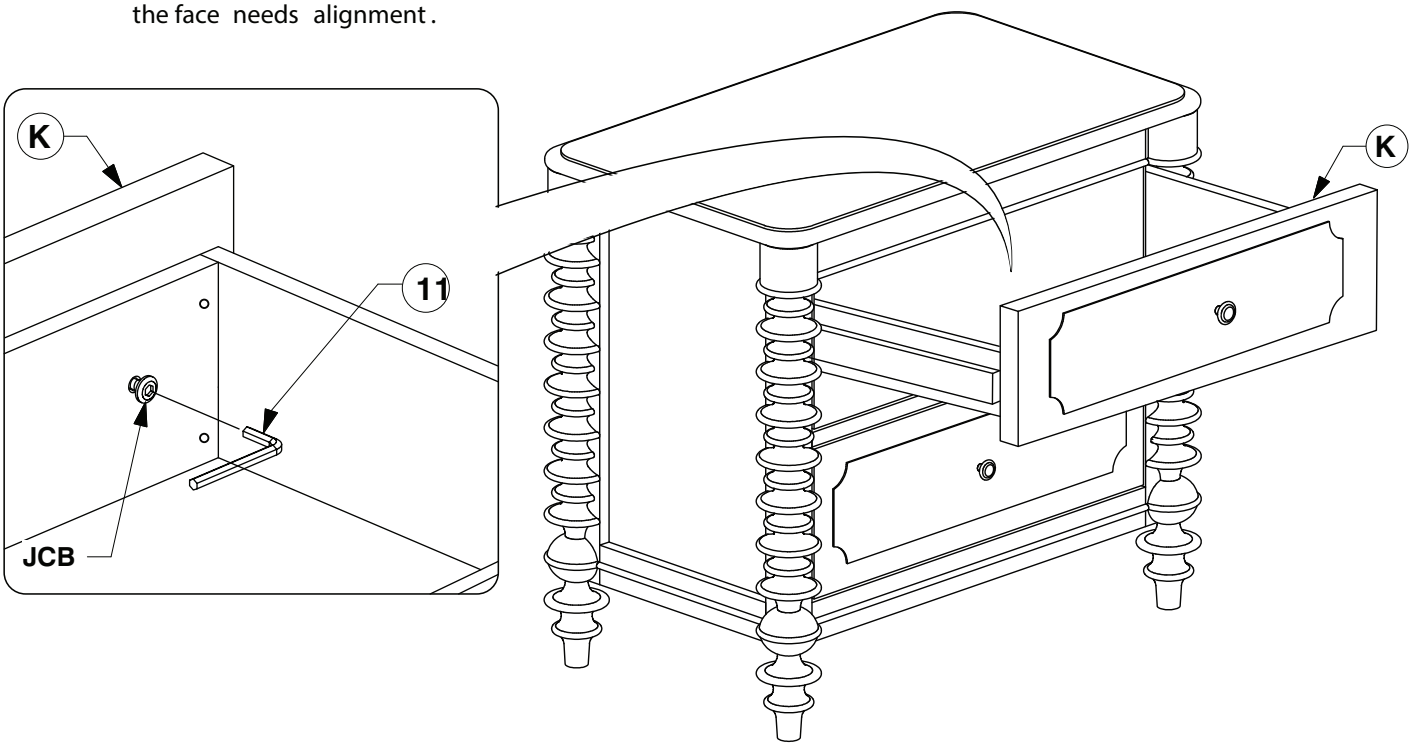

15 **After the Drawer Faces (K) are aligned, secure with wood screws.**

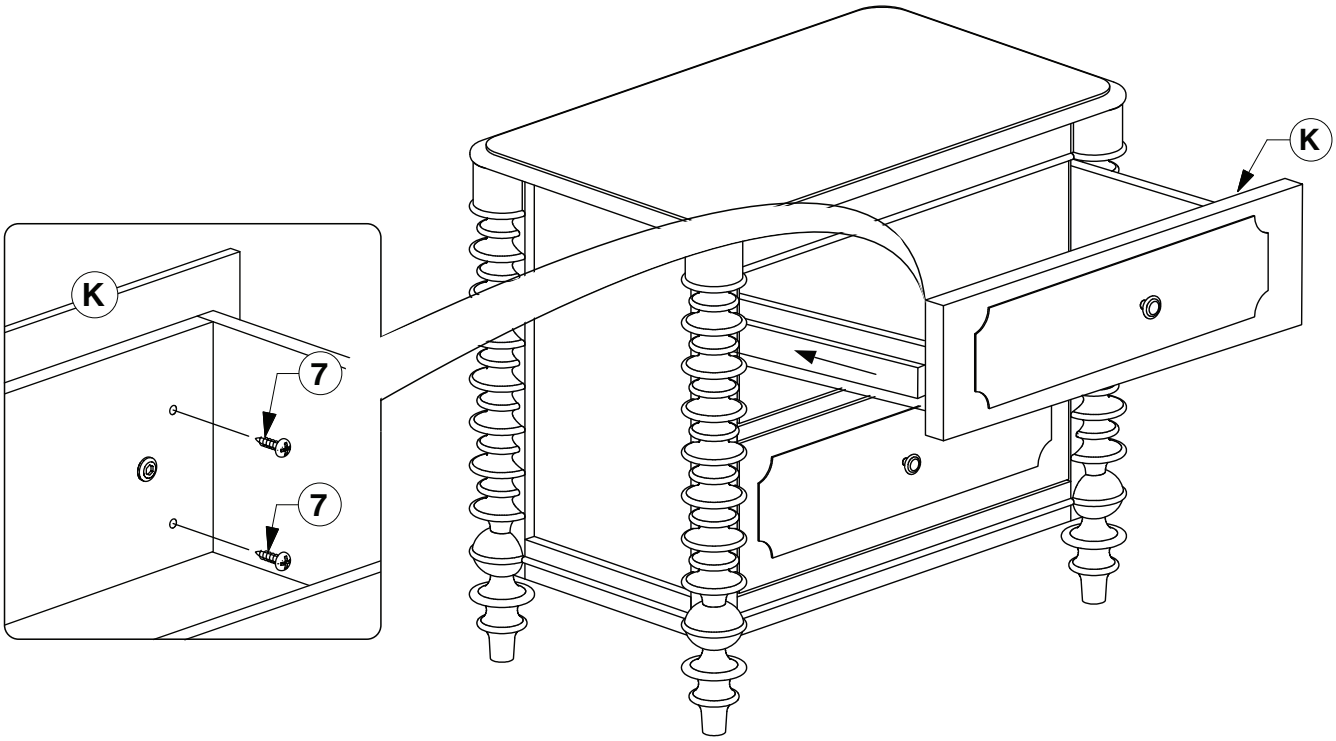

9029 3D Chest

Assembly Instructions

WI-0426

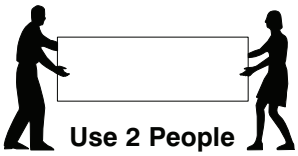

Note: Do not assemble using power tools. This can cause the bolts to be overtightened

1 Parts List

Parts in Box A:

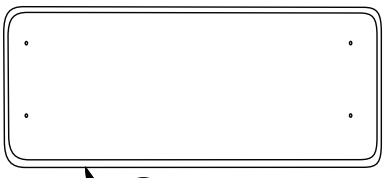

A Top Panel **x 1**

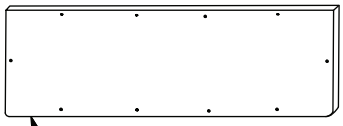

B Back Panel **x 3**

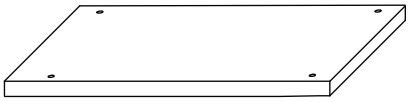

C Bottom Panel **x 1**

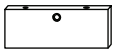

D Bottom Support **x 4**

E Front Bottom Support Bar **x 1**

F Front Support Bar **x 2**

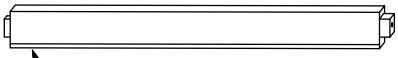

G Front Upper Support Bar **x 1**

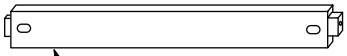

H Rear Support Bar **x 3**

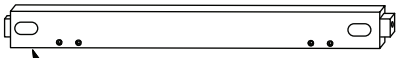

J Rear Bottom Support Bar **x 1**

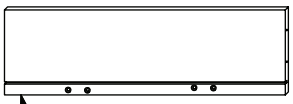

K Drawer Back **x 3**

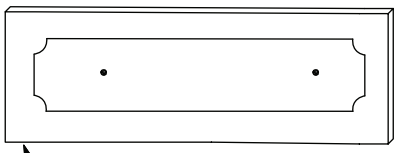

L Drawer Face **x 3**

M Drawer Bottom **x 3**

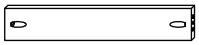

N Drawer Rail **x 6**

Parts in Box B:

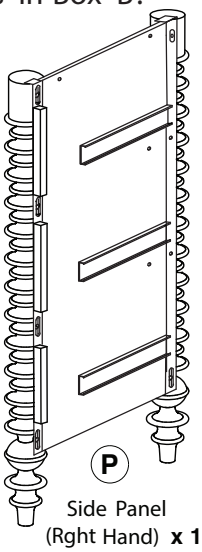

P Side Panel (Rght Hand) **x 1**

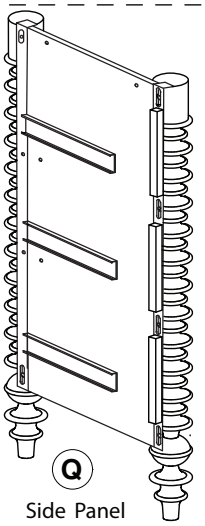

Q Side Panel (Left Hand) **x 1**

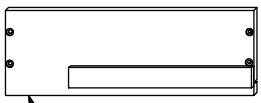

R Drawer Side (Left Hand) **x 3**

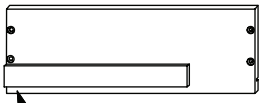

S Drawer Side (Right Hand) **x 3**

❷ Hardware List

1 M6 x 15mm JCB **x 16**

2 M6 x 40mm JCB **x 16**

3 M6 x60mm JCB **x 8**

4 'L' Bracket (5005-3) **x 8**

5 M8 x 30mm Wood Dowel **x 4**

6 M6 x 25mm Wood Dowel **x 24**

7 M4 x 20mm Wood Screw **x 18**

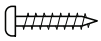

8 M4 x 25mm Wood Screw **x 36**

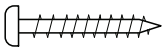

9 M4 x 32mm Wood Screw **x 30**

10 Handle (9029) **x 6**

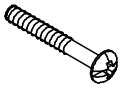

11 M4 x 22mm Wood Screw **x 6**

12 Allen Key **x 1**

❸ Assemble the Drawer Sides (R & S) and Drawer Rail (N) to the Drawer Face (L).

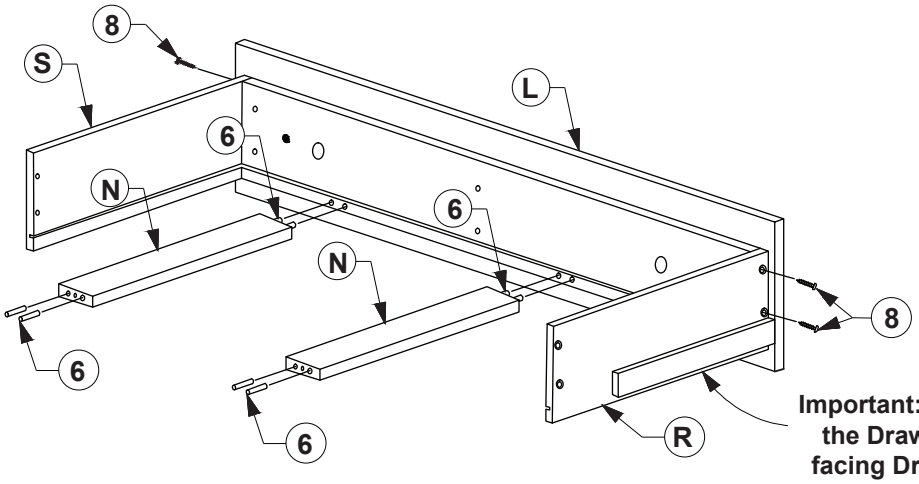

x3

4 **Slide the Drawer Bottom (M) into the groove on the Drawer Sides (R & S).**

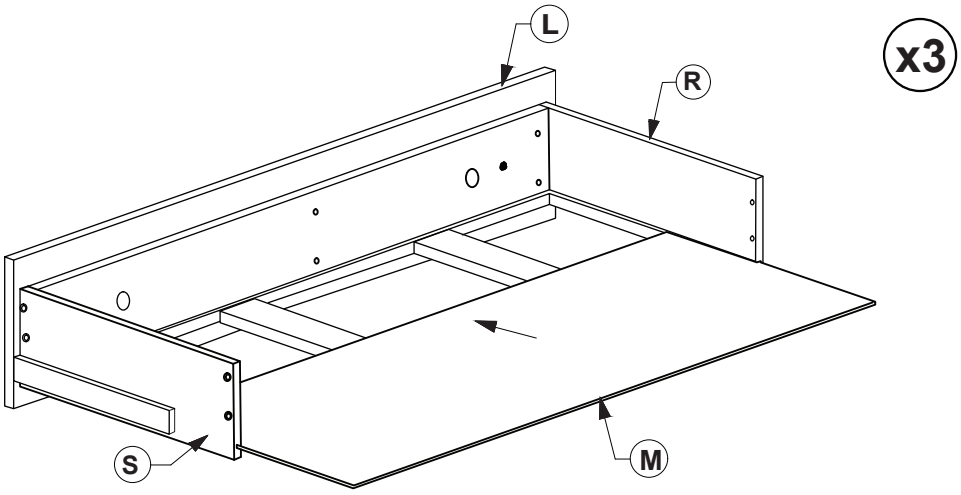

5 **Assemble the Drawer Back (K) to the Drawer Sides (R & S). Fit the Handle to the Drawer Face (L).**

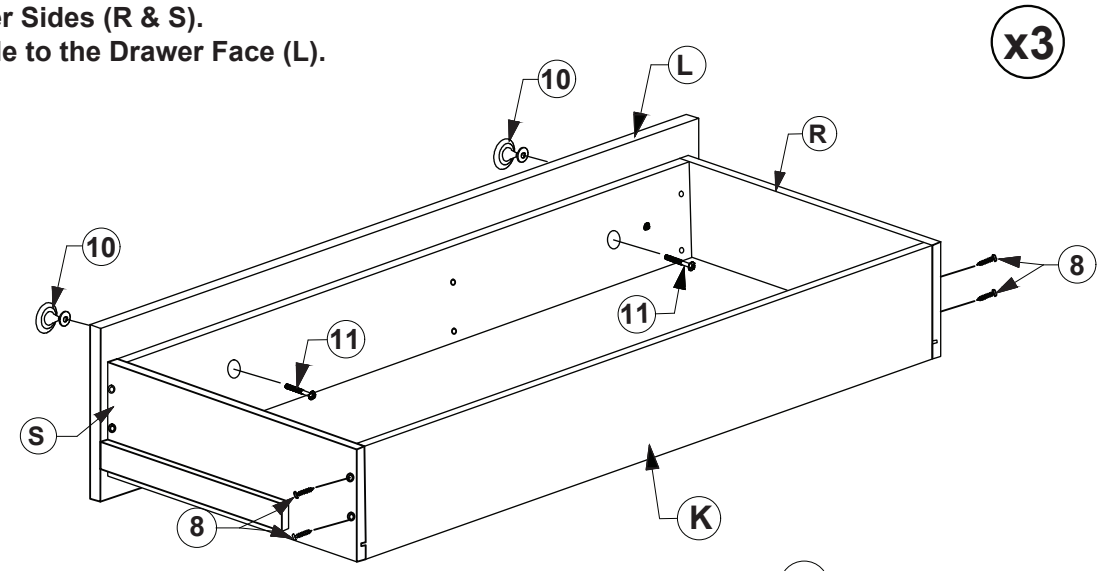

6 **Turn the Drawer over to fit angled 25mm Wood screws (8) to the Drawer Rail (N).**

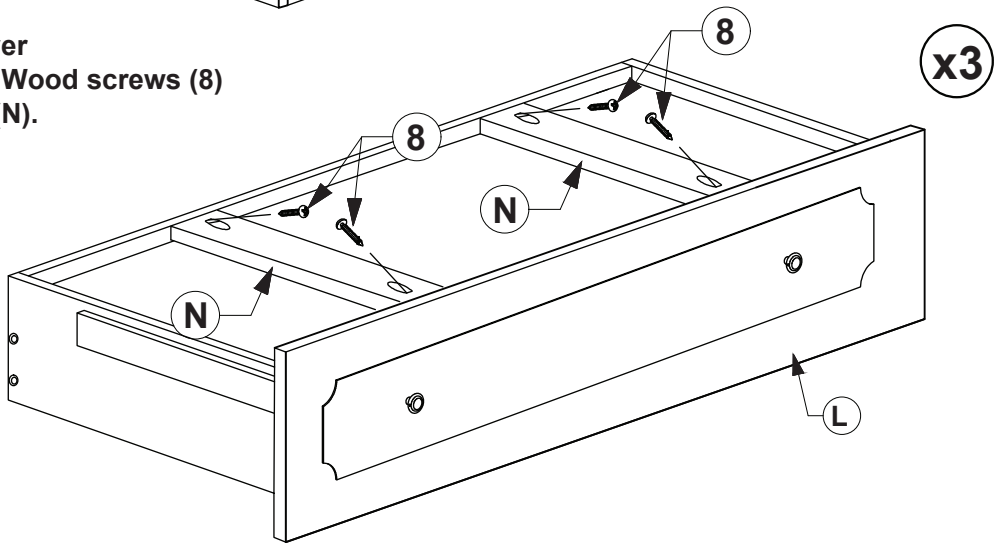

7 Fit the 'L' Bracket (4) to the Side Panel (P & Q).

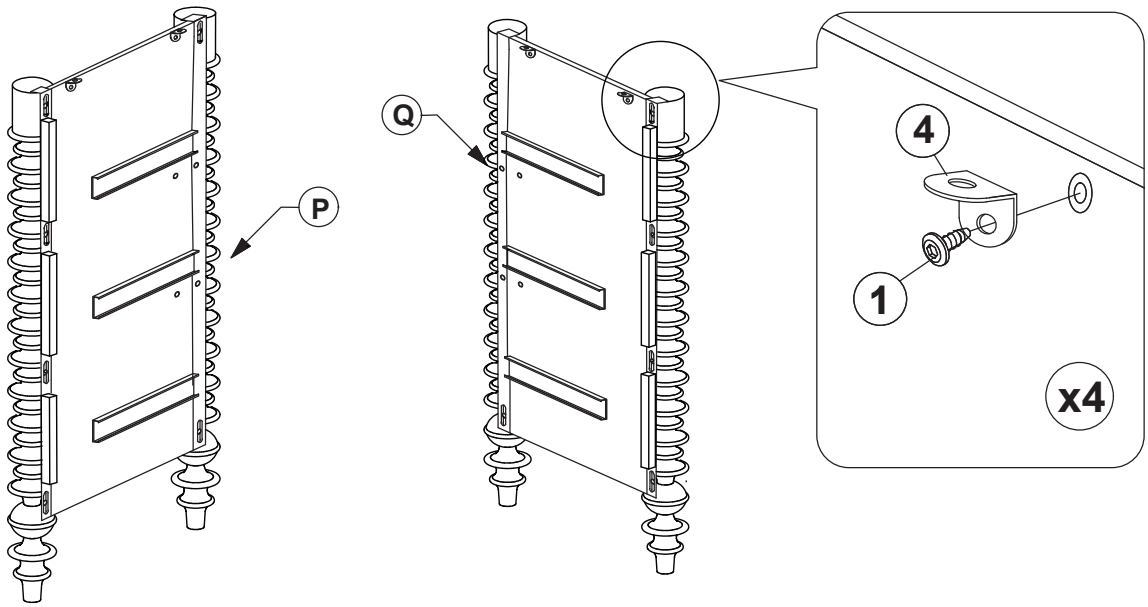

8 Fit the "L" Braket (4) and Wood Dowel (5) to the Front Support Bar (F).

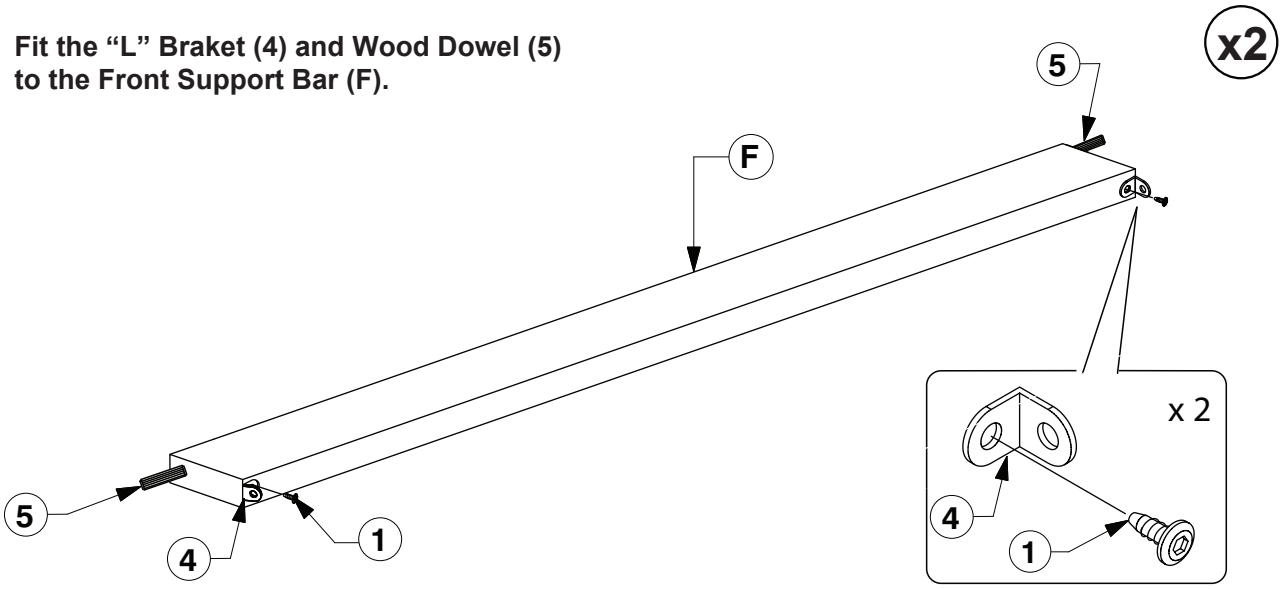

9 Assemble Support Bar (E, F, G, H & J) to the Side Panel (Q).

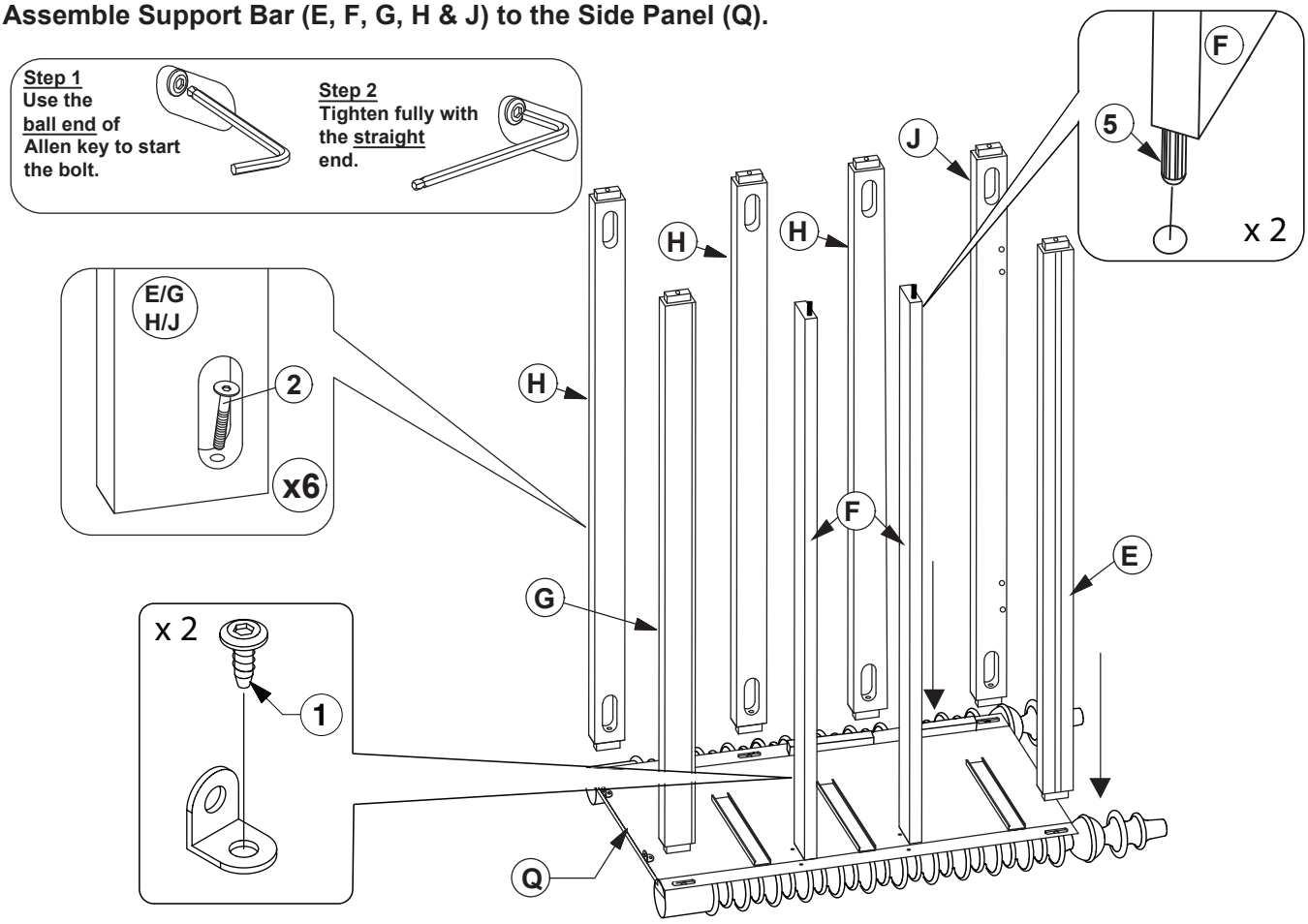

10 Fit the Side Panel (P) to the Support Bar (E, F, G, H & J).

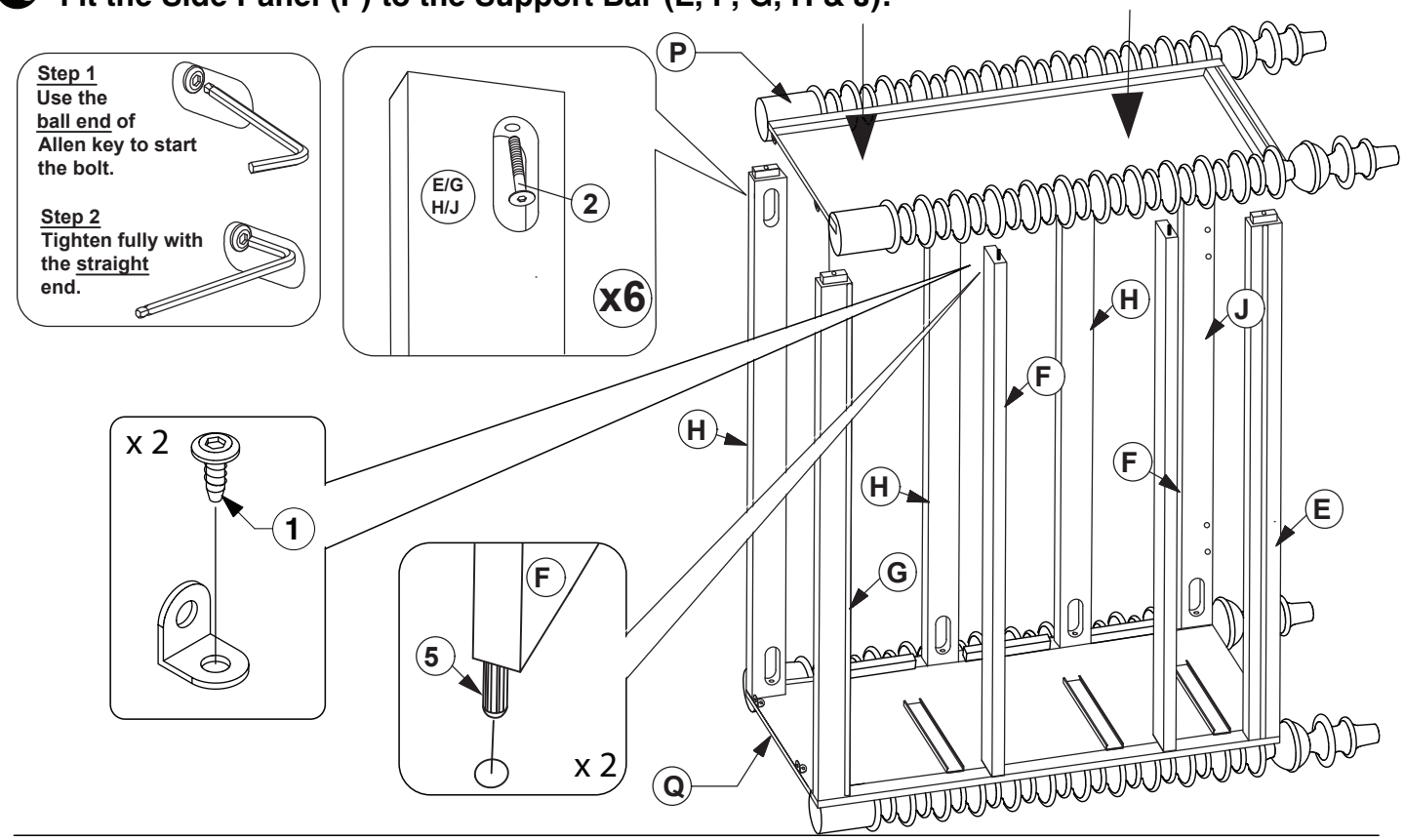

11 Assemble the Side Panel (P & Q) to the Top Panel (A).

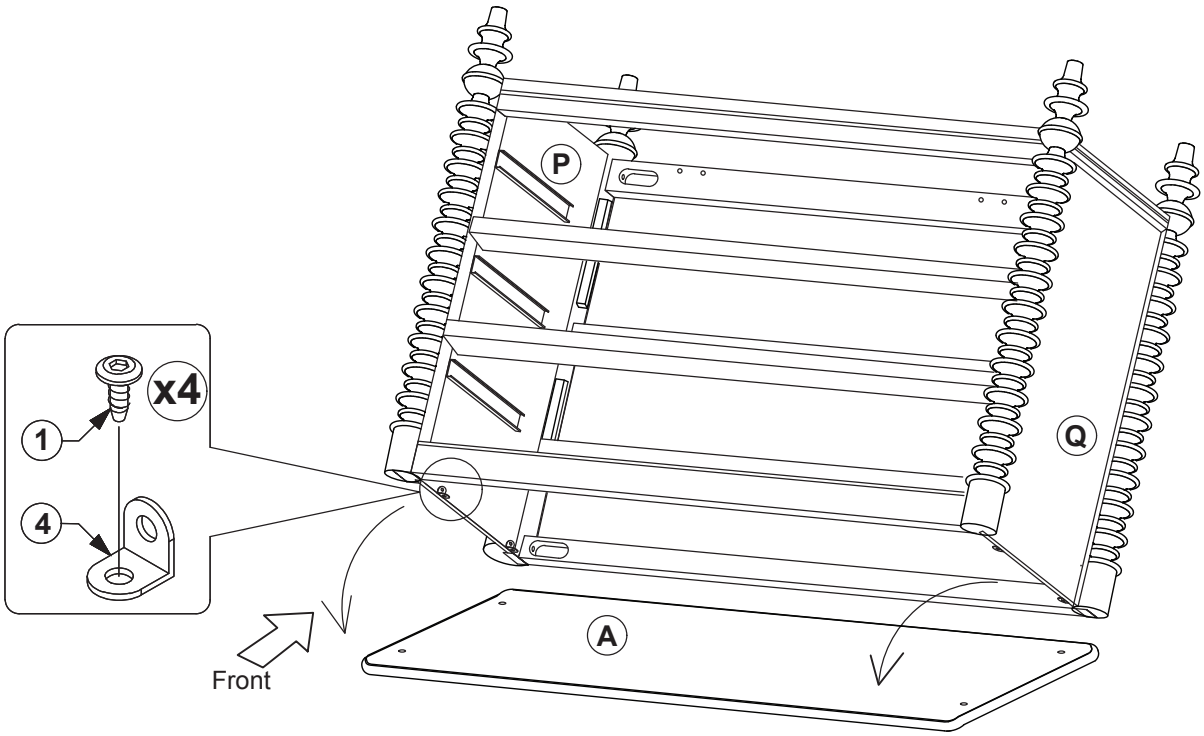

12 Assembled the Bottom Support (D) to the Bottom Front & Rear Support Bar (E & J) as shown.

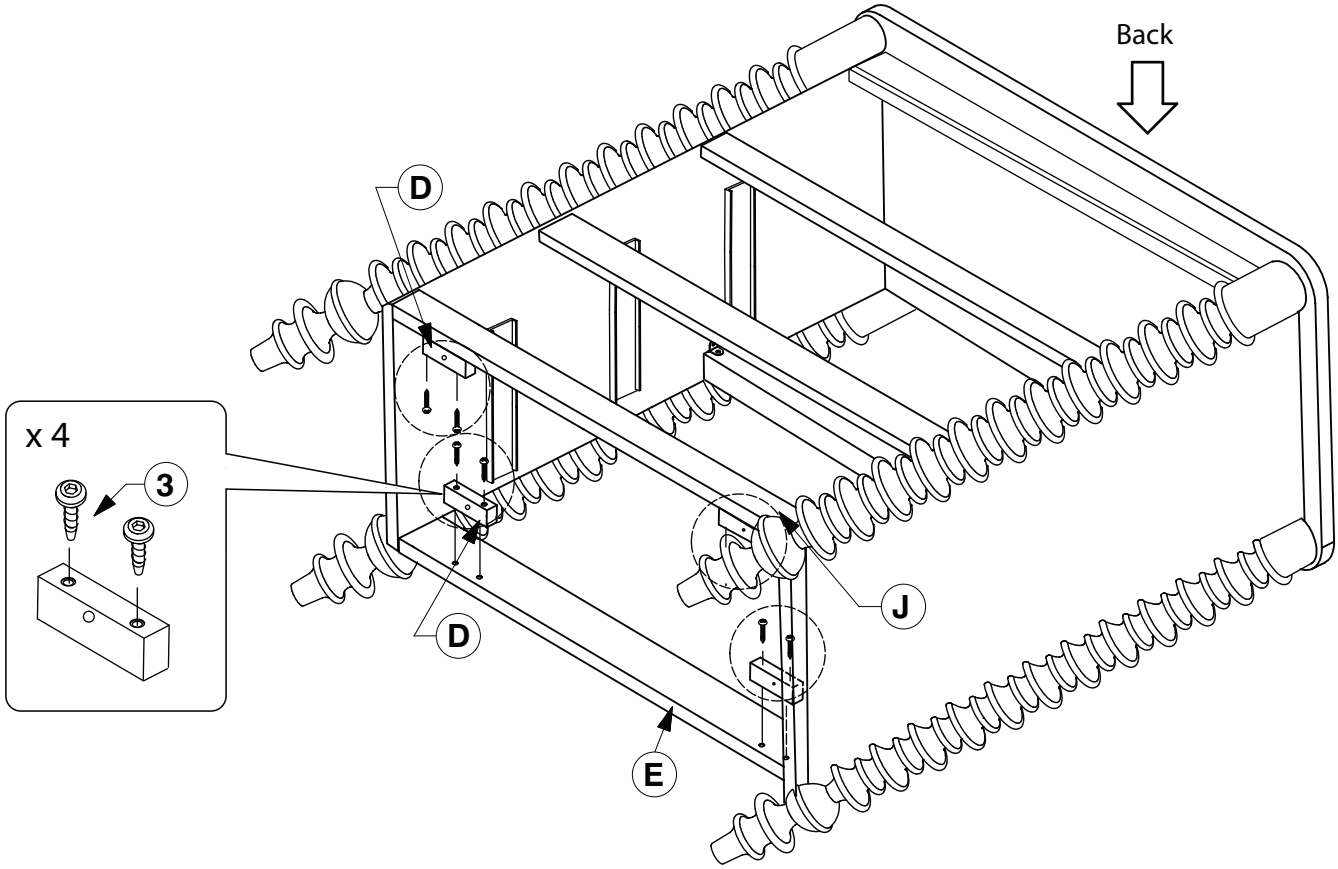

13 Bolt the Bottom Support (D) to the Bottom Panel (C) as shown.

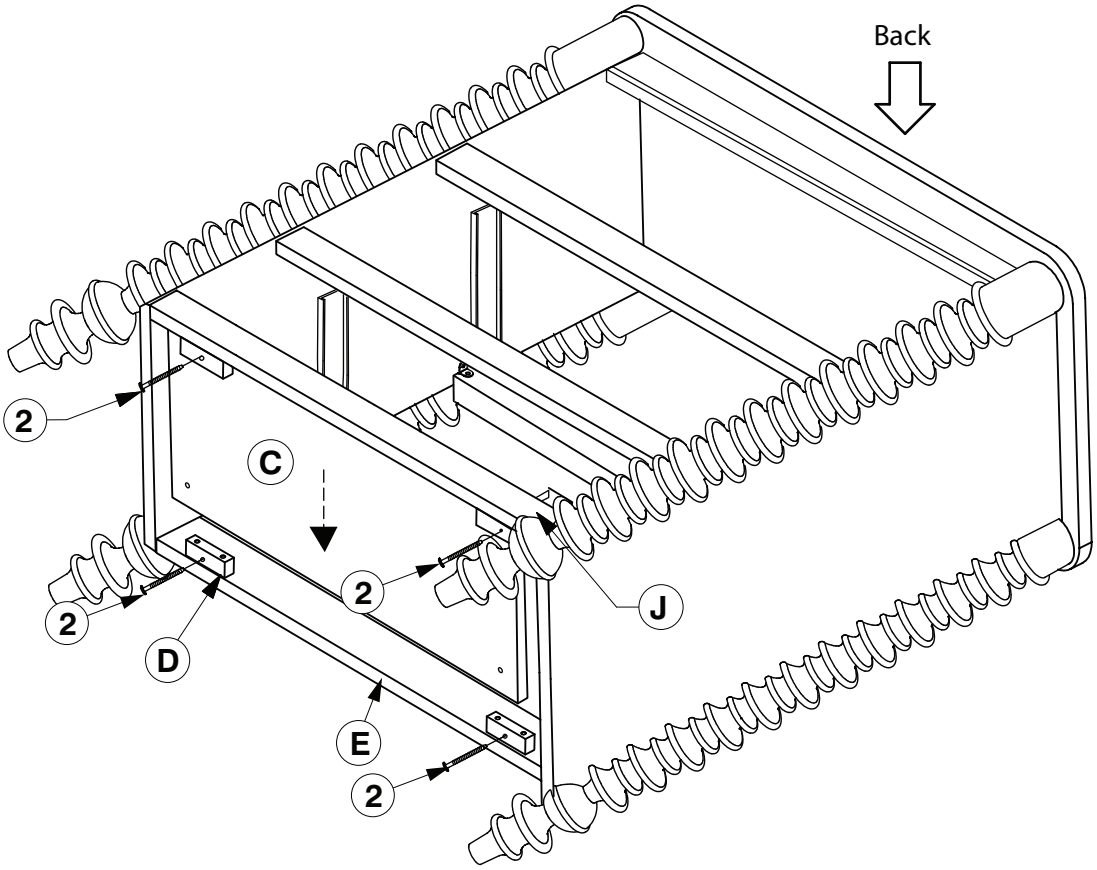

14 Use screw to tighten the Back Panel (B) to the back of the frame.

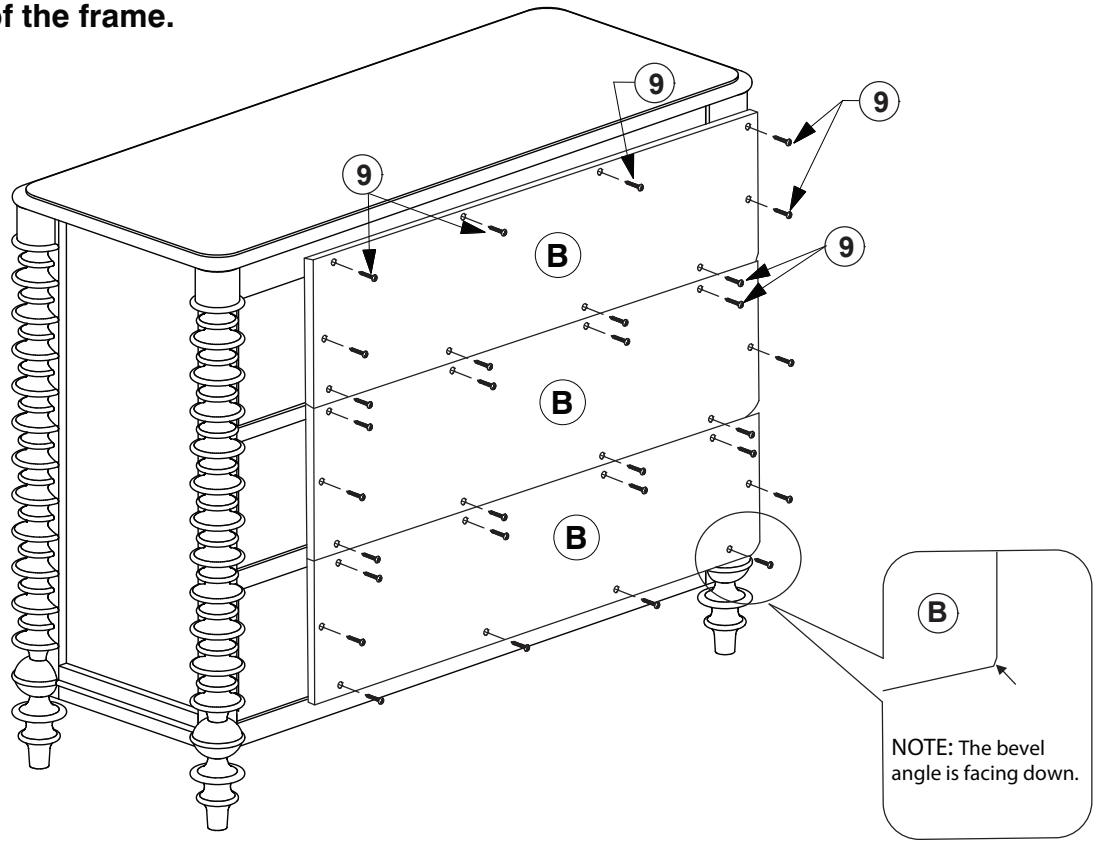

WI-0426

15 Fit the Drawer Face (L) to the casegood body.

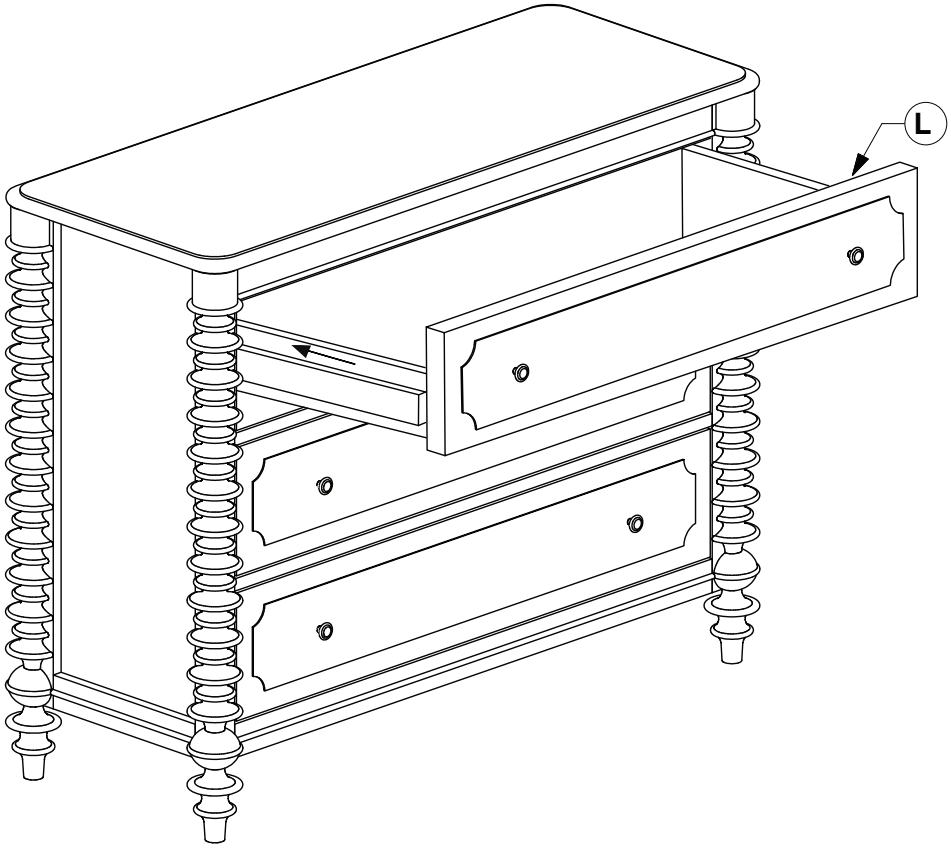

16 Adjust the Drawer Face (L) .

✻ NOTE: Before fitting the Wood Screws . Lossen the JCBs on the Drawer Face if the face needs alignment .

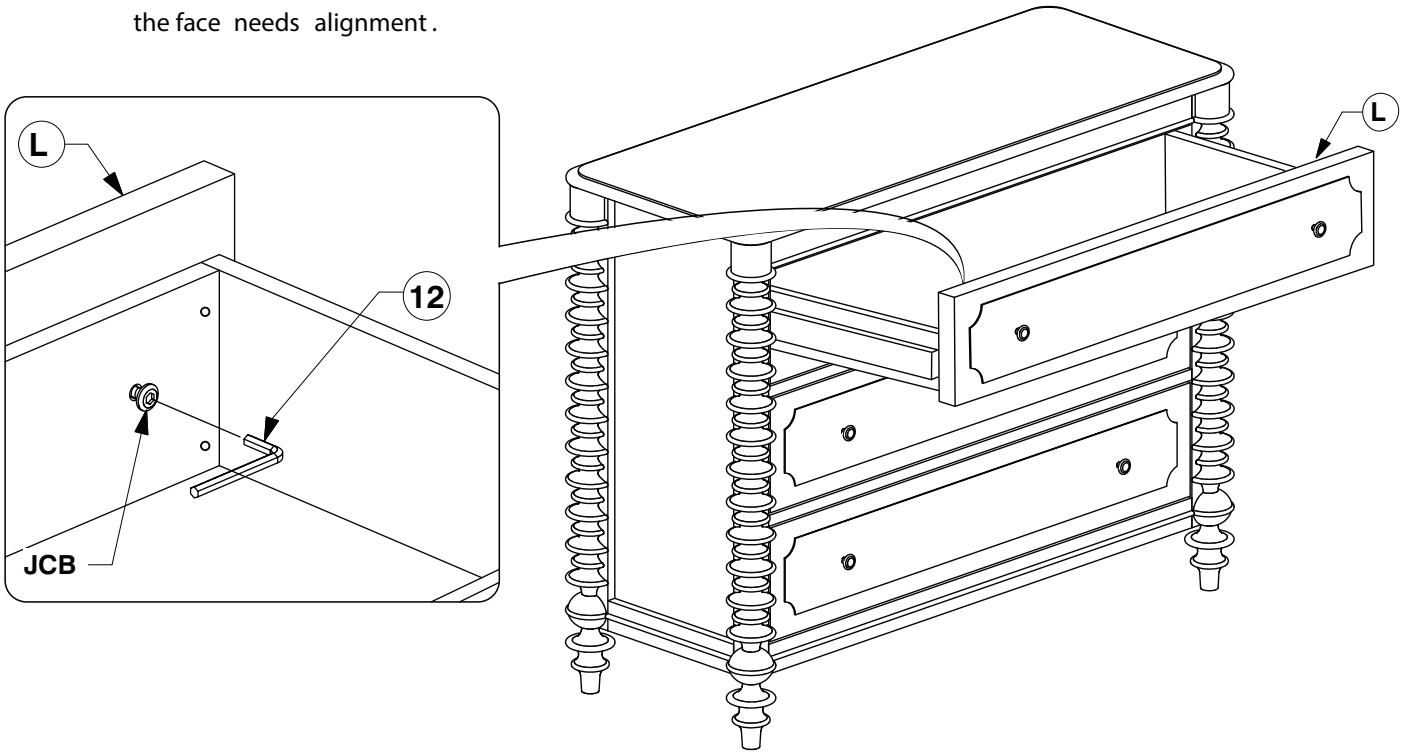

WI-0426
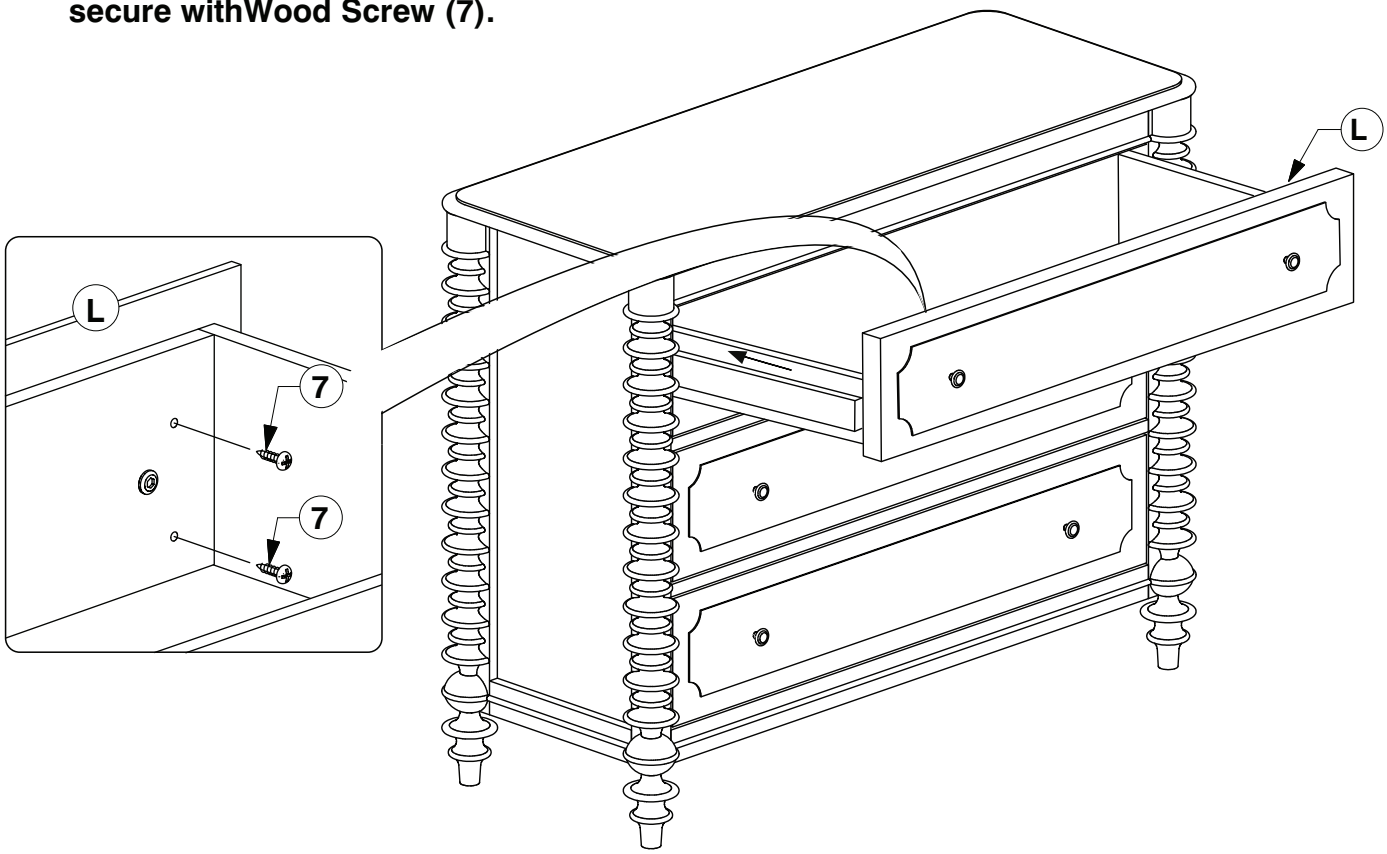
17 **After the Drawer Faces (L) are aligned, secure withWood Screw (7).**