0110-11 Canopy Queen Bed

Assembly Instructions

WI-0226

1 Assembled View

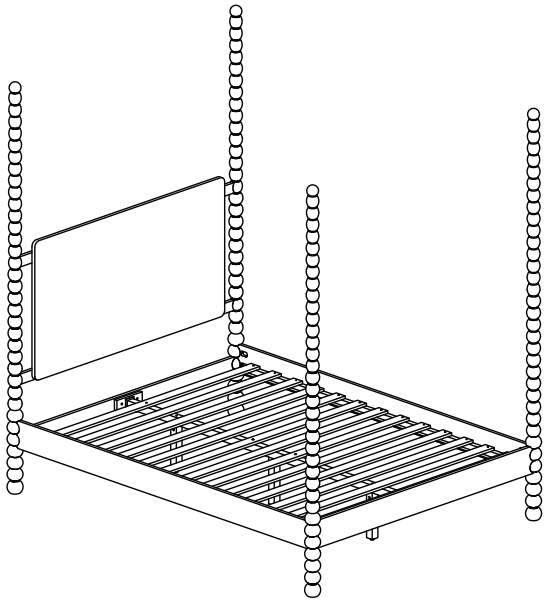

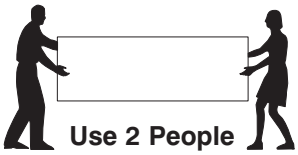

Note: Do not assemble using power tools. This can cause the bolts to be overtightened

2 Parts List

Parts in Box A:

A Headboard Panel **x 1**

B Headboard Lower Support **x 1**

C Headboard Rear Support **x 2**

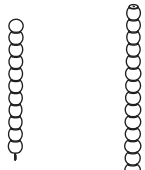

G HB/FB Upper Post **x 4**

H Headboard Lower Post (Left) **x 1**

J Headboard Lower Post (Right) **x 1**

K Footboard Lower Post (Left) **x 1**

L Footboard Lower Post (Right) **x 1**

Parts in Box B:

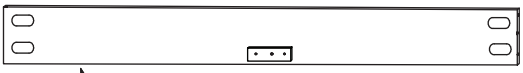

D Footboard Panel **x 1**

E Side Rail **x 2**

F Long Support **x 1**

M Support Leg **x 3**

Partsin Box A:

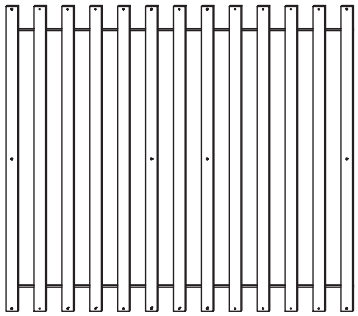

N Set of Bed Slats **x 1**

0110-11 Canopy Queen Bed

Assembly Instructions

WI-0226

3 Hardware List

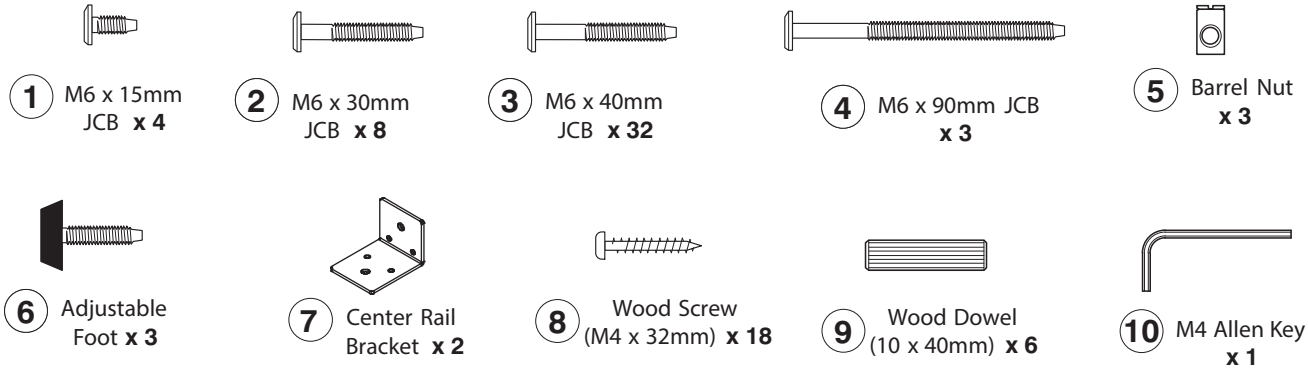

4 Assembled the Support Leg (M) to the Long Support (F).

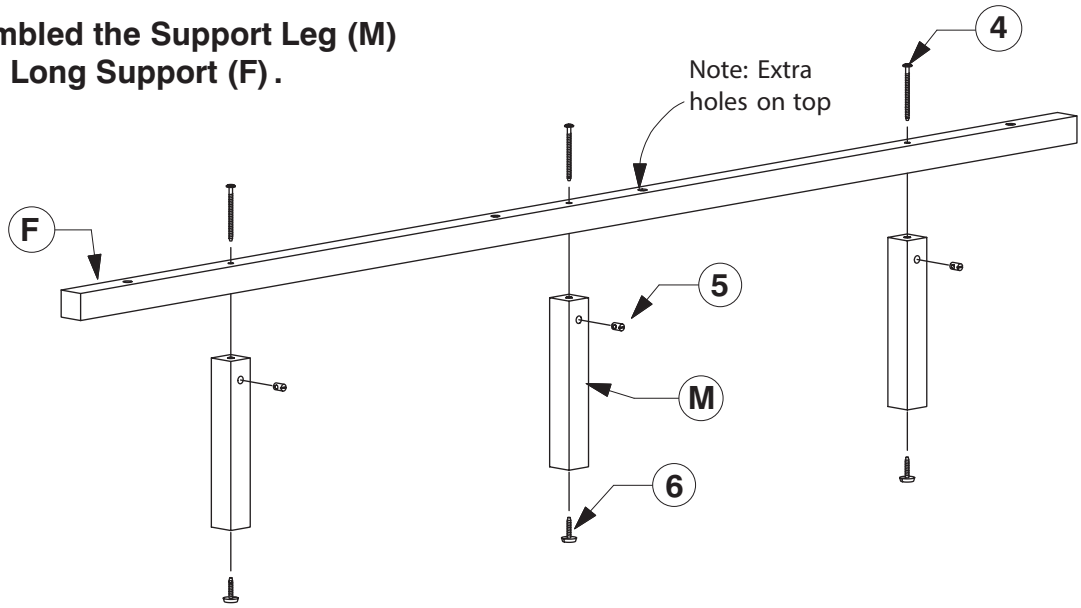

5 Fit the Center Rail Bracket (7) to the Headboard Lower Support (B).

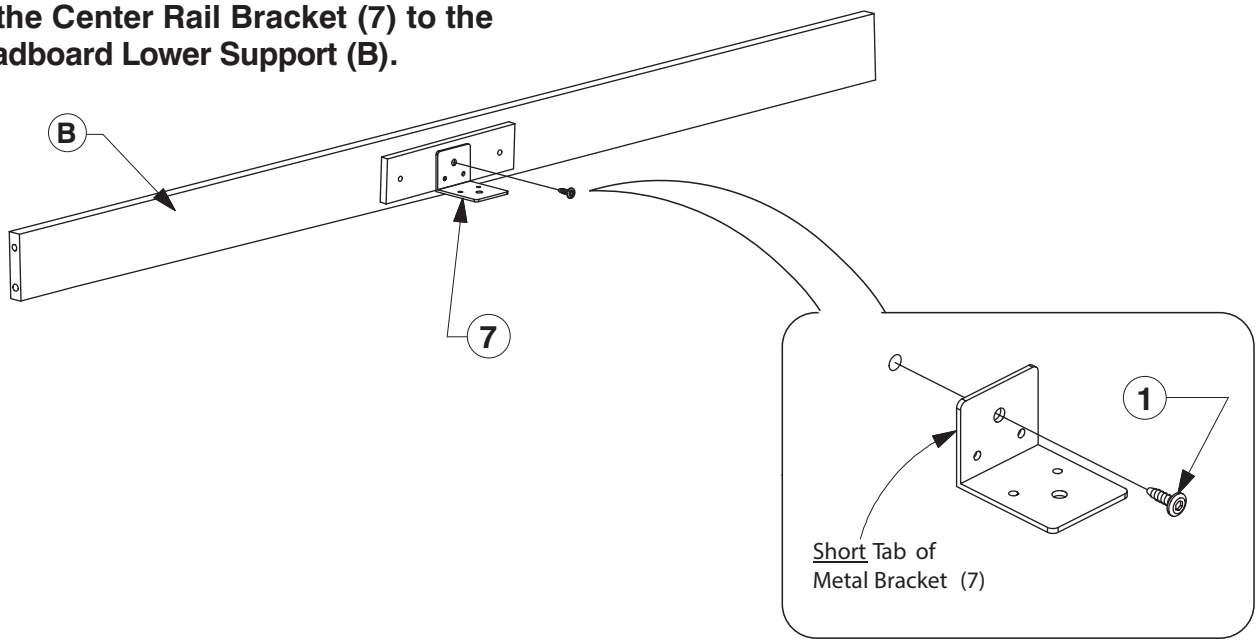

6 Assembled the Headboard Rear Support (C) to the Headboard Panel (A).

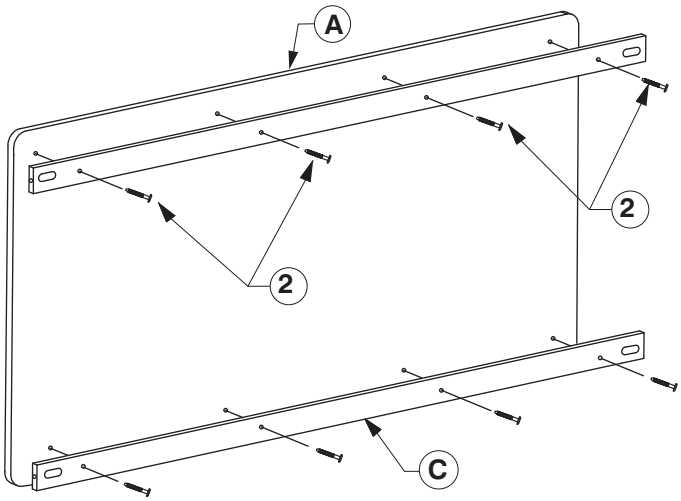

7 Fit the HB/FB Upper Post (G) to the HB Lower Post (H & J) and FB Lower Post (K & L)

x4

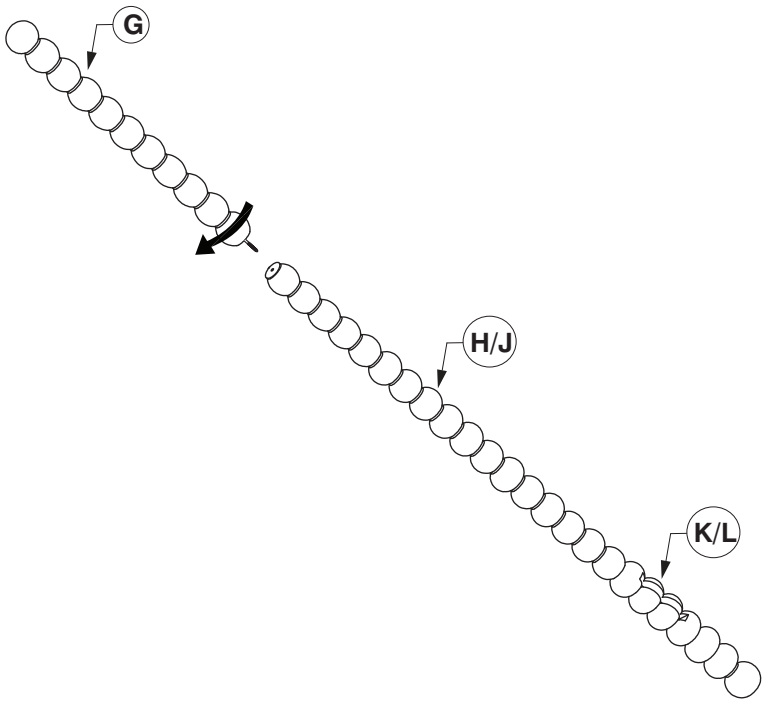

WI-0226

8 Assembled the Headboard Post (H & J) to the Headboard Panel (A) and Headboard Lower Support (B).

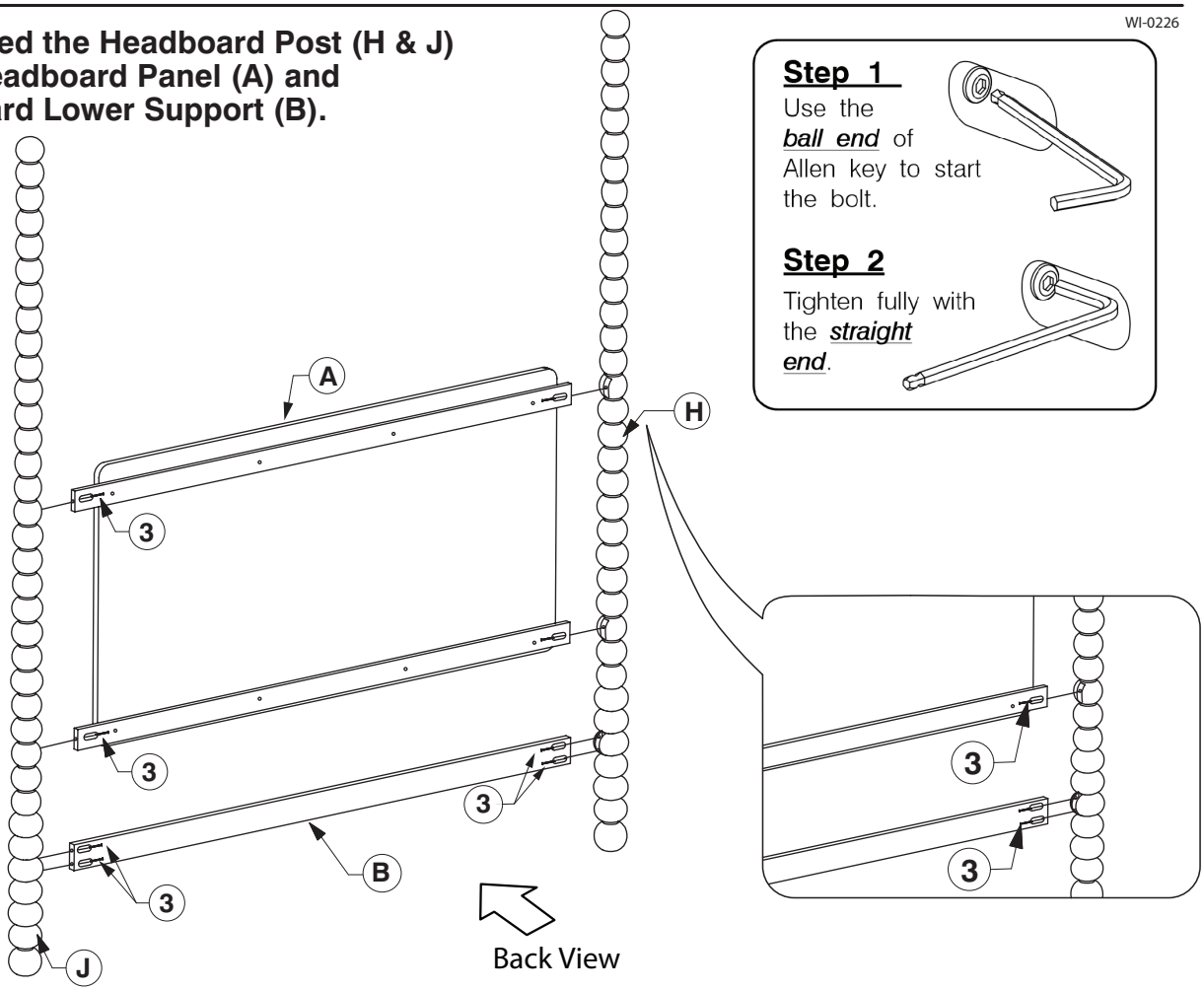

9 Assemble the Footboard Post (K & L) to the Footboard Panel (D). Fit the Center Rail Bracket (7) to the Footboard Support (D)

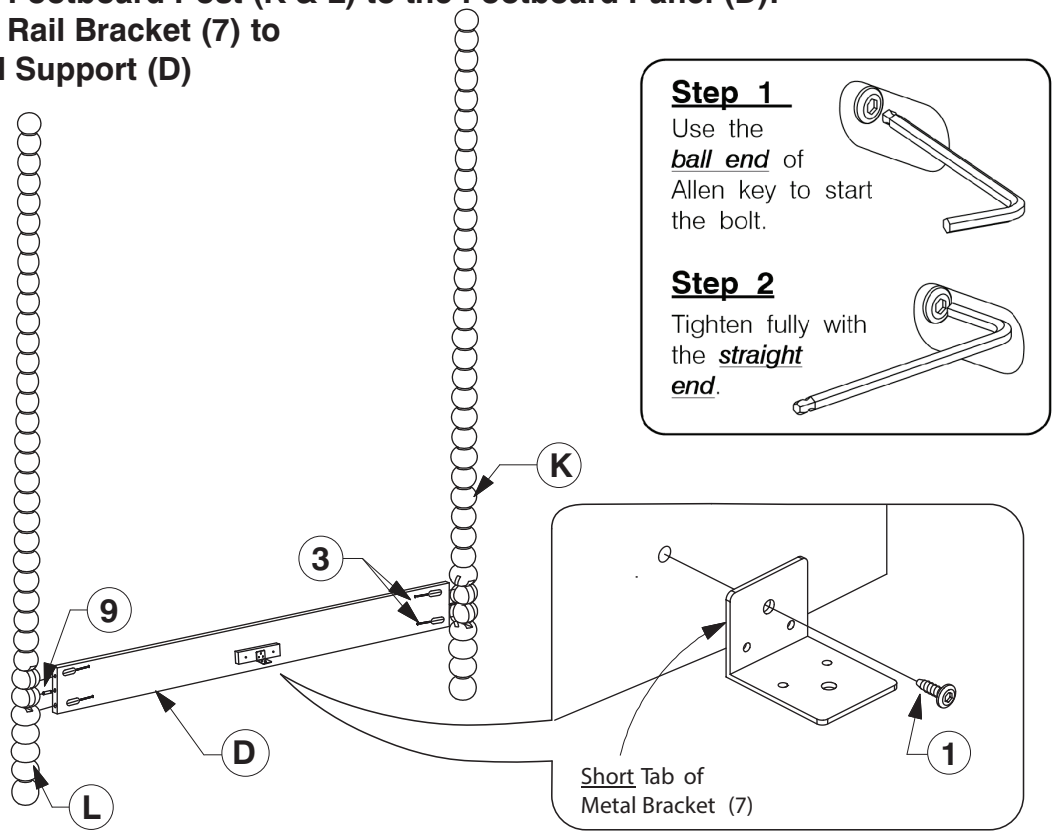

WI-0226

10 **Assemble the Side Rail (E) to the Headboard Post (H & J) & Footboard Post (K & L).**

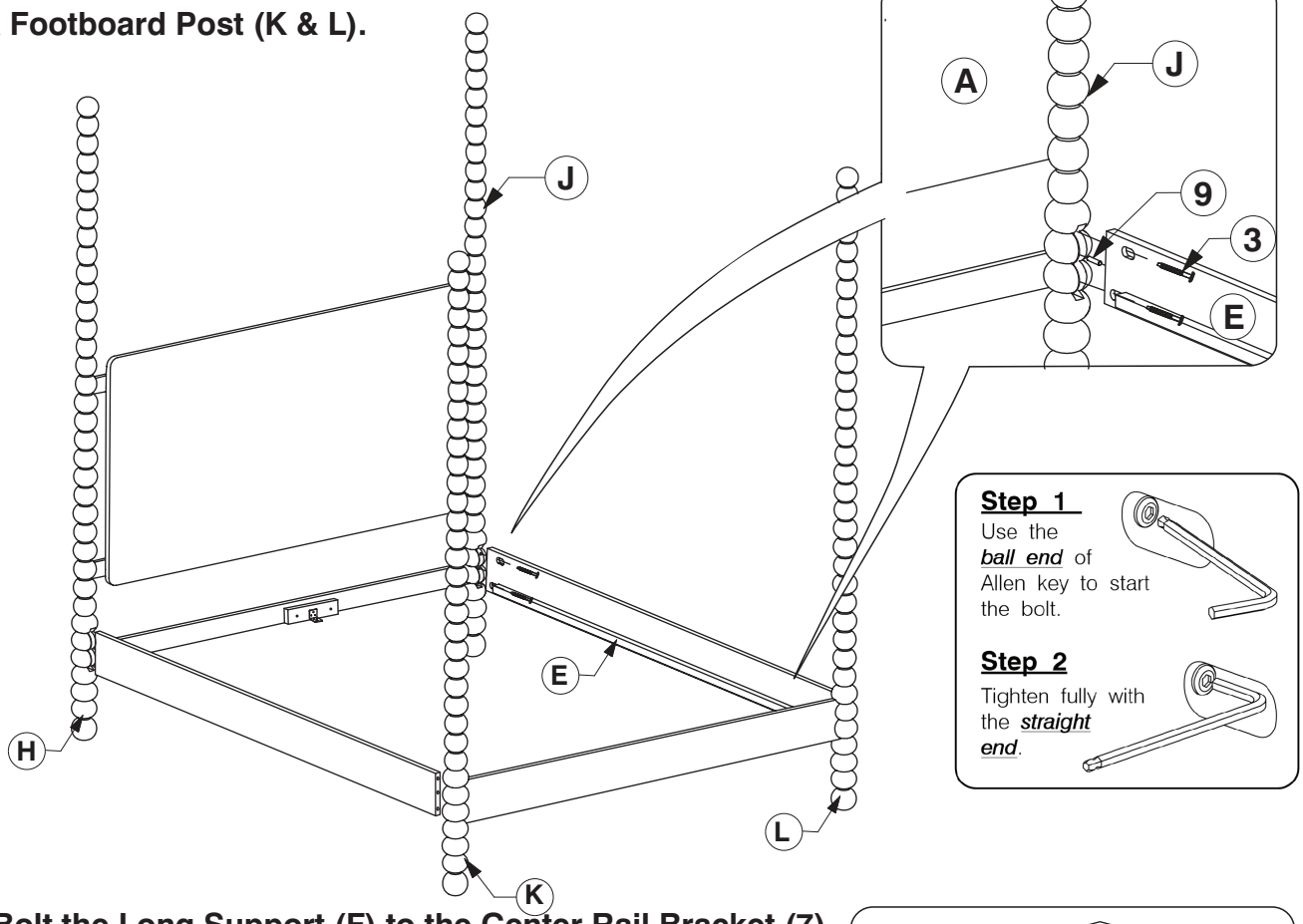

11 **Bolt the Long Support (F) to the Center Rail Bracket (7) on the Headboard Lower Support (B) & Footboard Panel (D).**

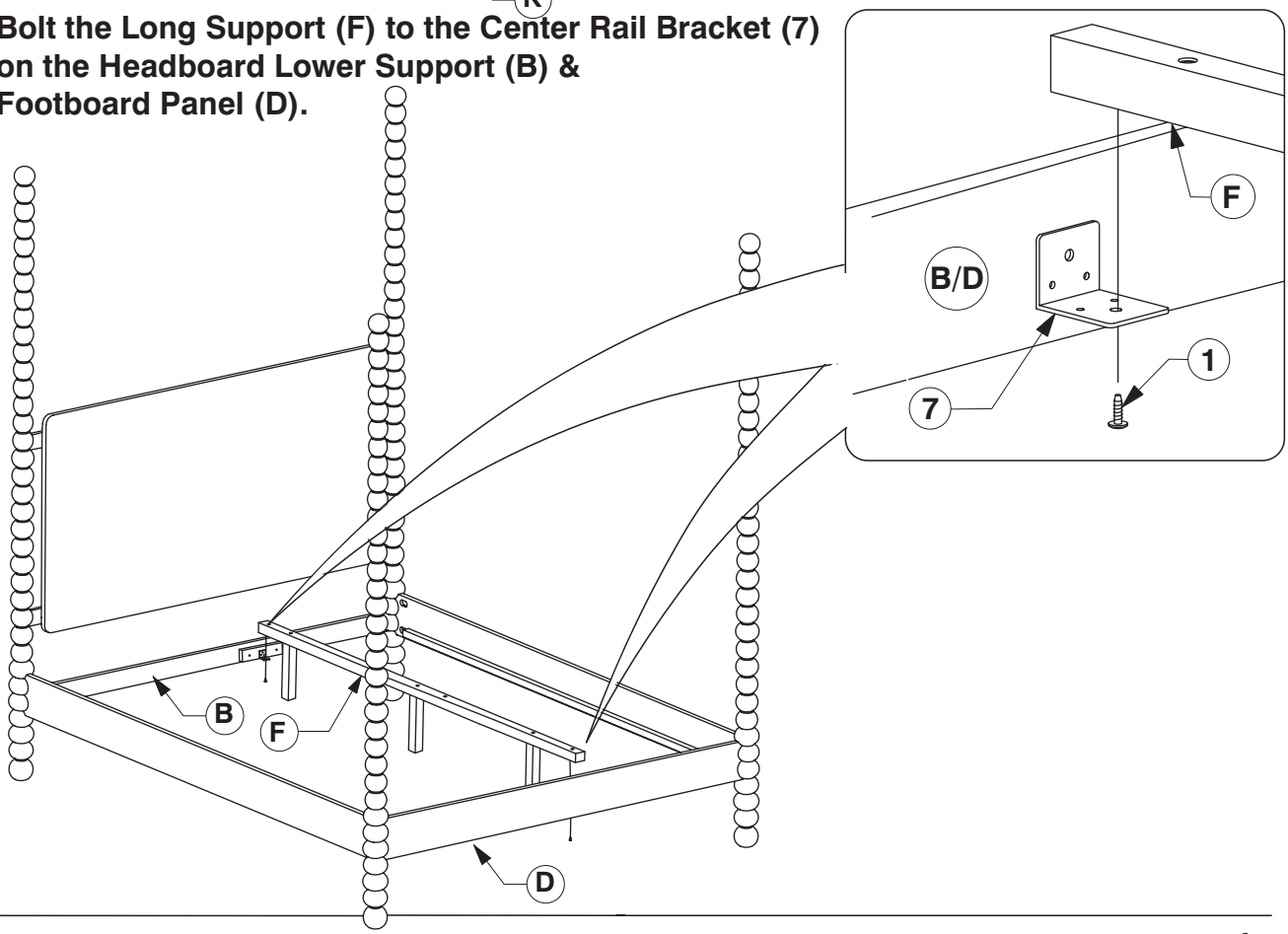

12 Bolt & screw the Bed Slats (N) to the Side Rail (E).

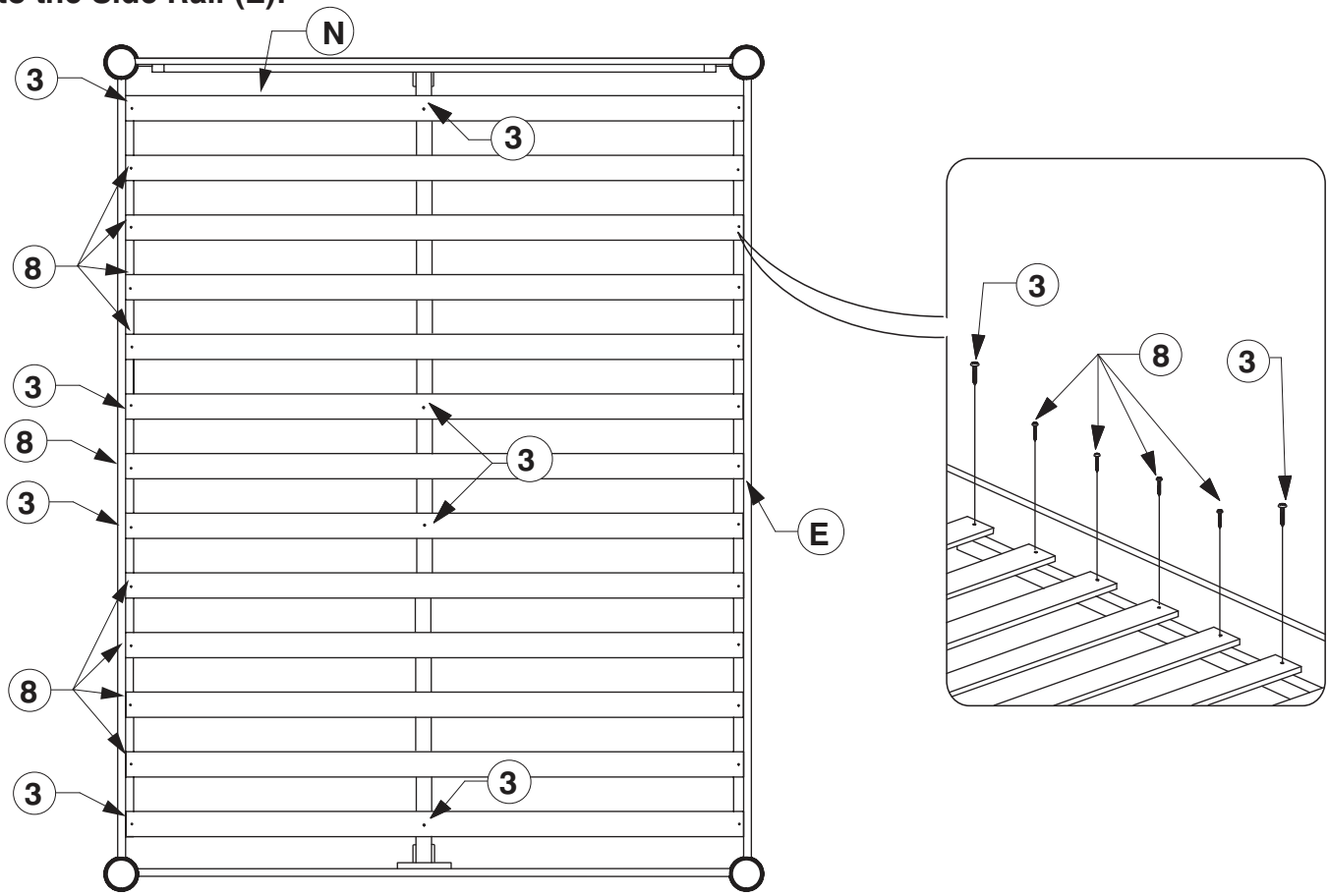

9025 6 Drawer Dresser

Assembly Instructions

WI-1024

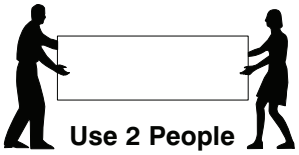

<u>Note:</u> Do not assemble using power tools. This can cause the bolts to be overtightened

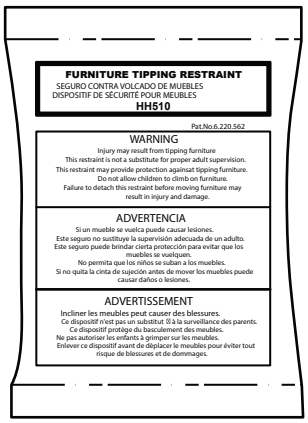

Anti Tipping Kit

Anti Tipping Kit **x 1**

WARNING

Children have died from furniture tipover.
To reduce the risk of furniture tipover:

- ALWAYS install anti-tip device provided.
- NEVER put a TV on this product.
- NEVER allow children to stand, climb, or hang on any drawers, doors or shelves.
- NEVER open more than one drawer at a time.
- DO NOT defeat or remove the drawer interlock system; it is an important stability and safety system.
- Place heaviest items in the lowest drawer.

9025 6 Drawer Dresser

Assembly Instructions

WI-1024

1 Parts List

Parts in Box A:

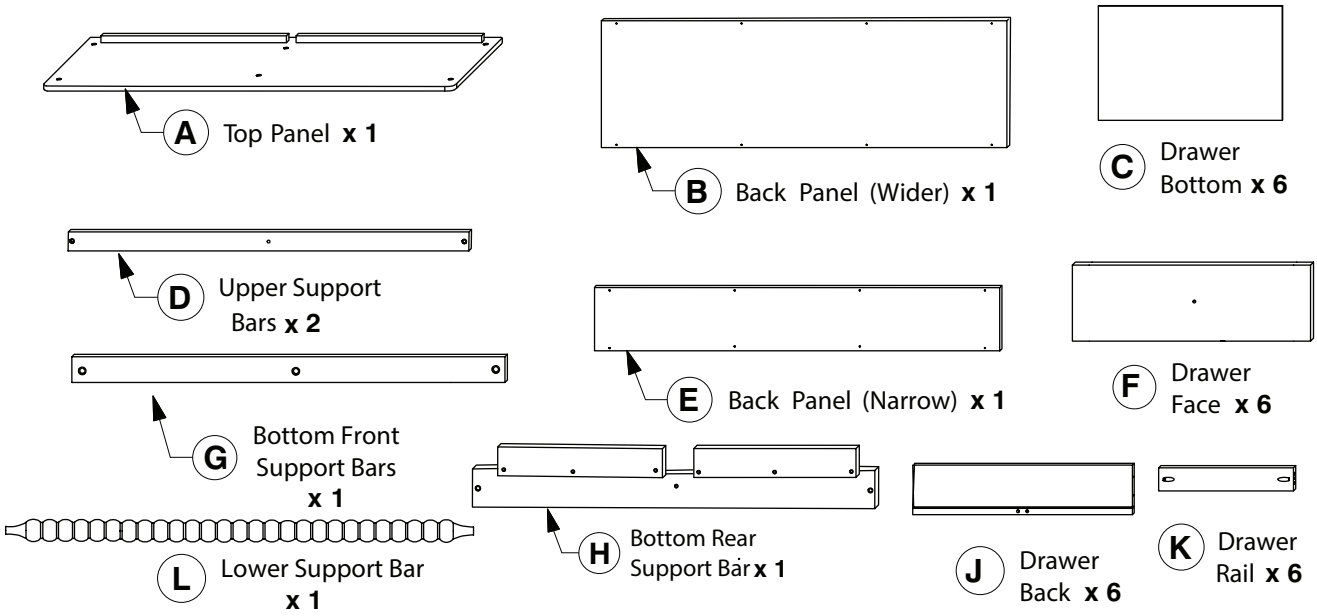

Parts in Box B:

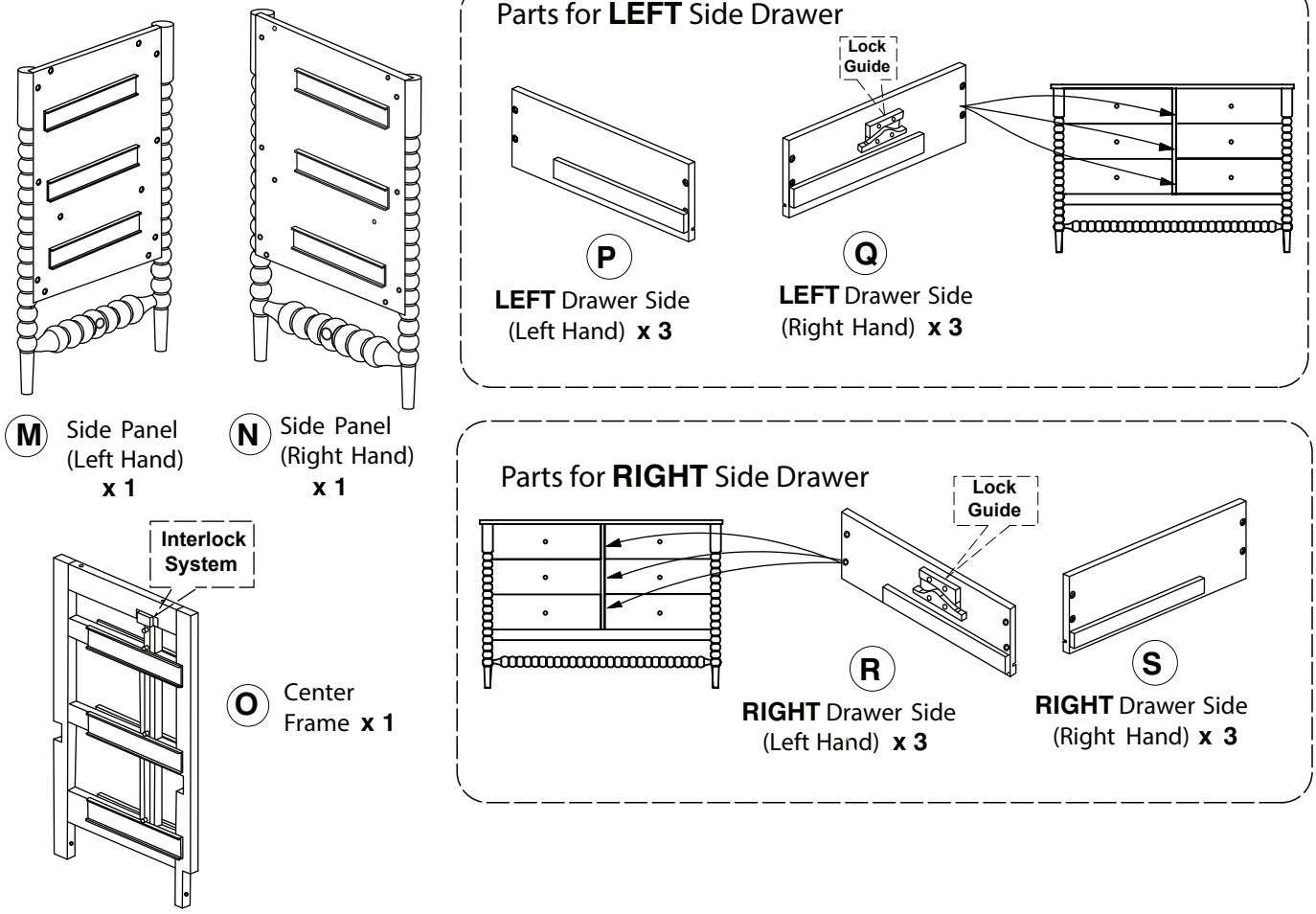

2 Hardware List

1 M6 x 15mm JCB **x 24**

2 M6 x 30mm JCB **x 4**

3 M6 x 60mm JCB **x 2**

4 'L' Bracket (5005-3) **x 12**

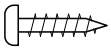

5 Wood Screw (M4 x 20mm) **x 24**

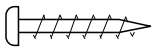

6 Wood Screw (M4 x 32mm) **x 16**

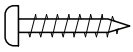

7 Wood Screw (M4 x 25mm) **x 60**

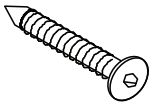

8 M6 X50mm JCBC W **x 2**

9 Handle **x 6**

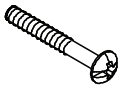

10 M4 x 22mm Wood Screw **x 6**

11 M6 x 25mm Wood Dowel **x 24**

12 Allen Key **x 1**

3 Assemble the Drawers.

STEP 3.1

LEFT

x 3

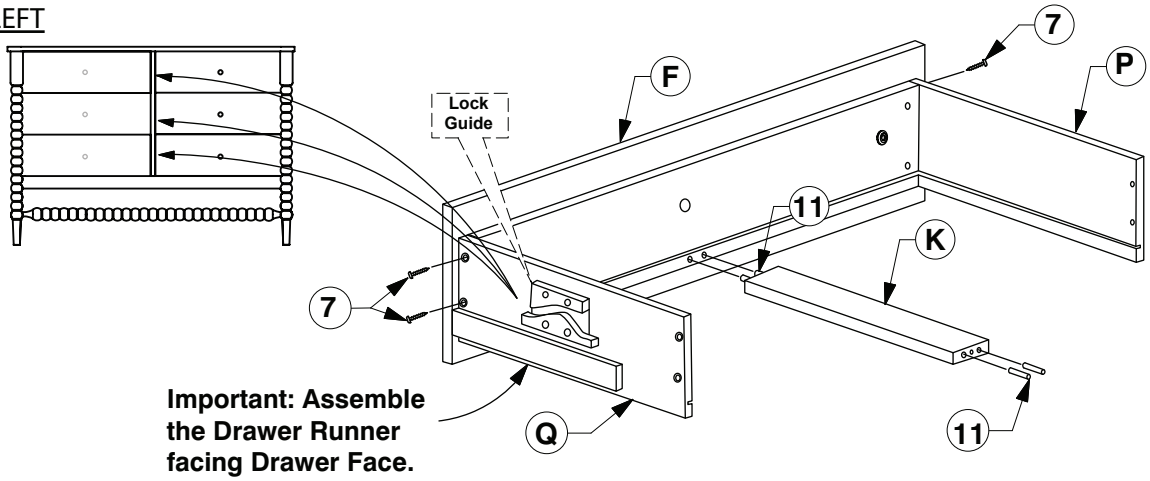

x 3

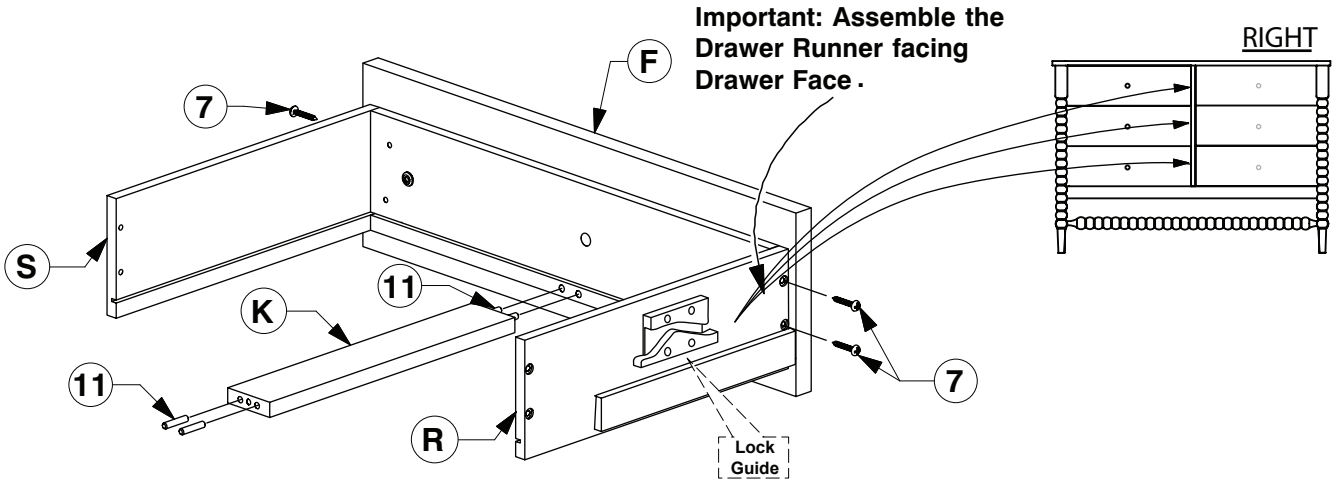

❸ Assemble the Drawers.

STEP 3.2

x6

✻ *3 Assemble the left and right* drawers as shown below

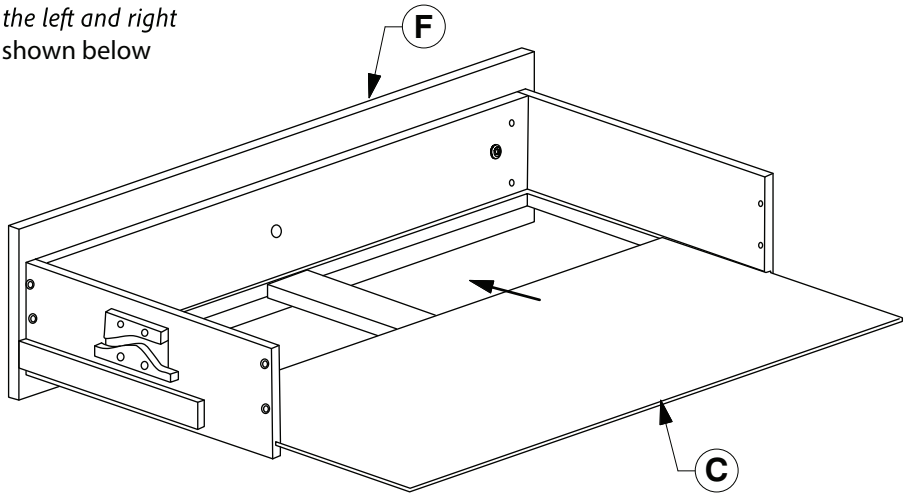

STEP 3.3

x6

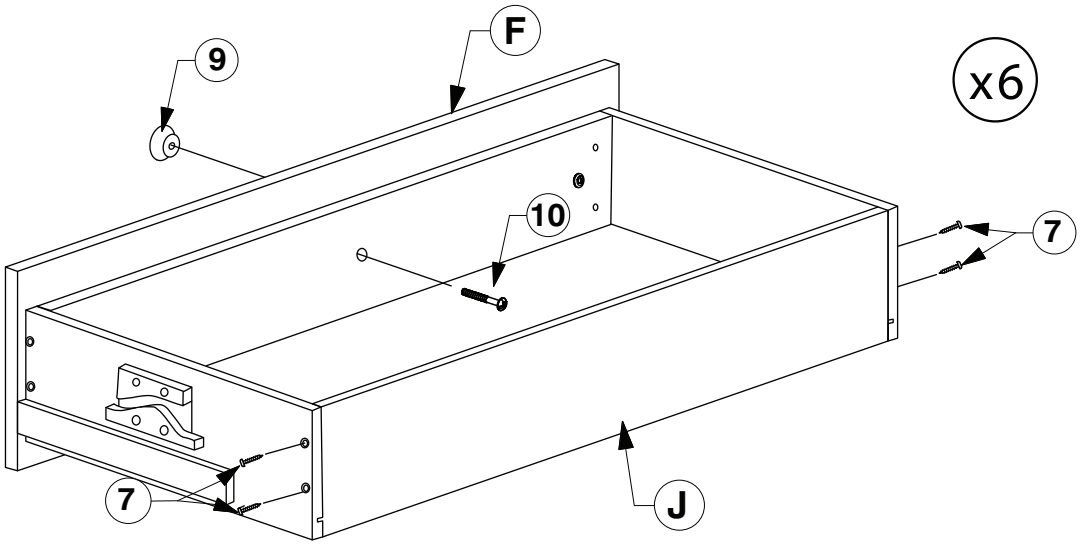

x6

STEP 3.4

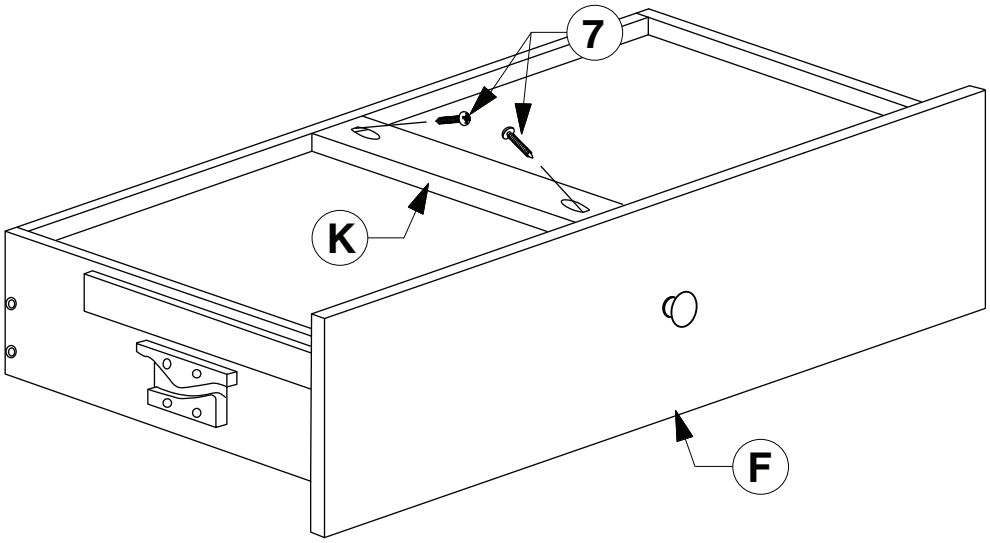

4 Fit the 'L' Bracket to the Side Panel (M & N).

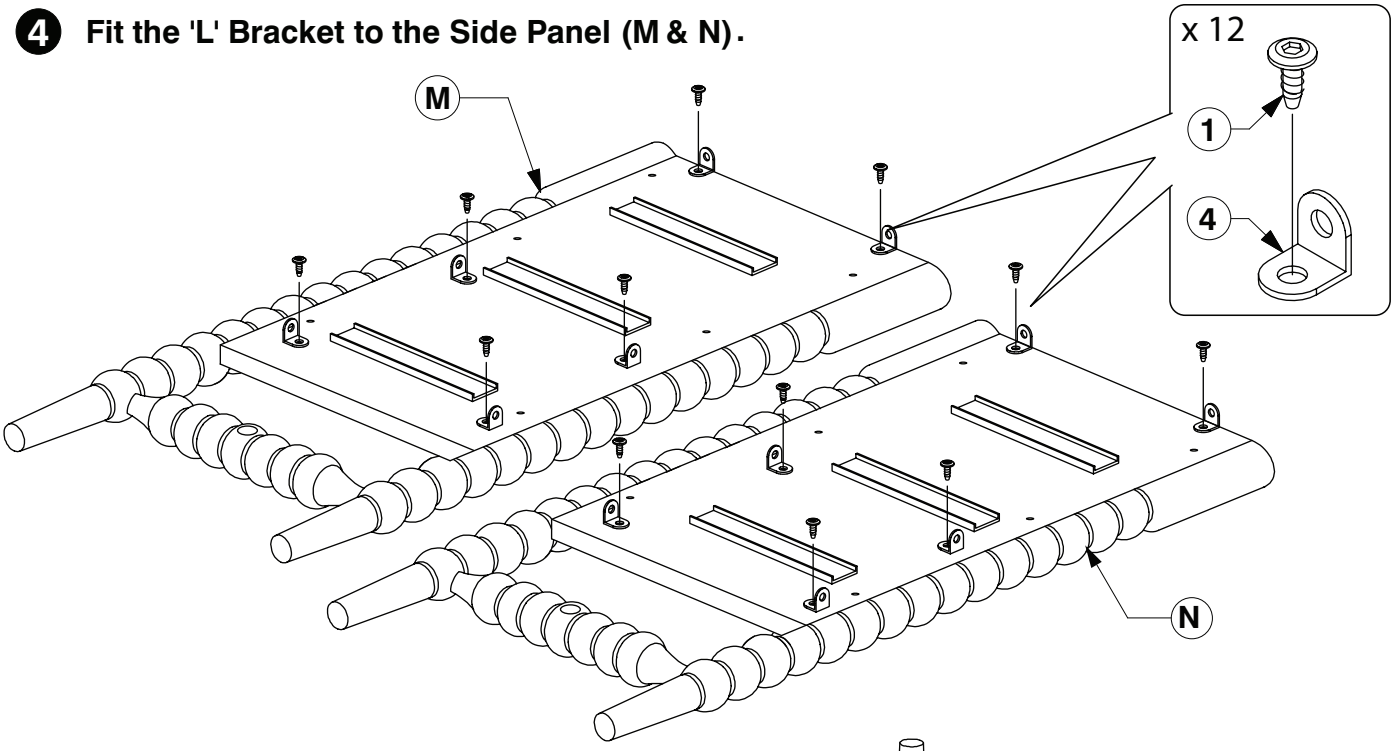

5 Fit the Side Panel- Right Hand (N) & Center Frame (O) to the Top Panel (A).

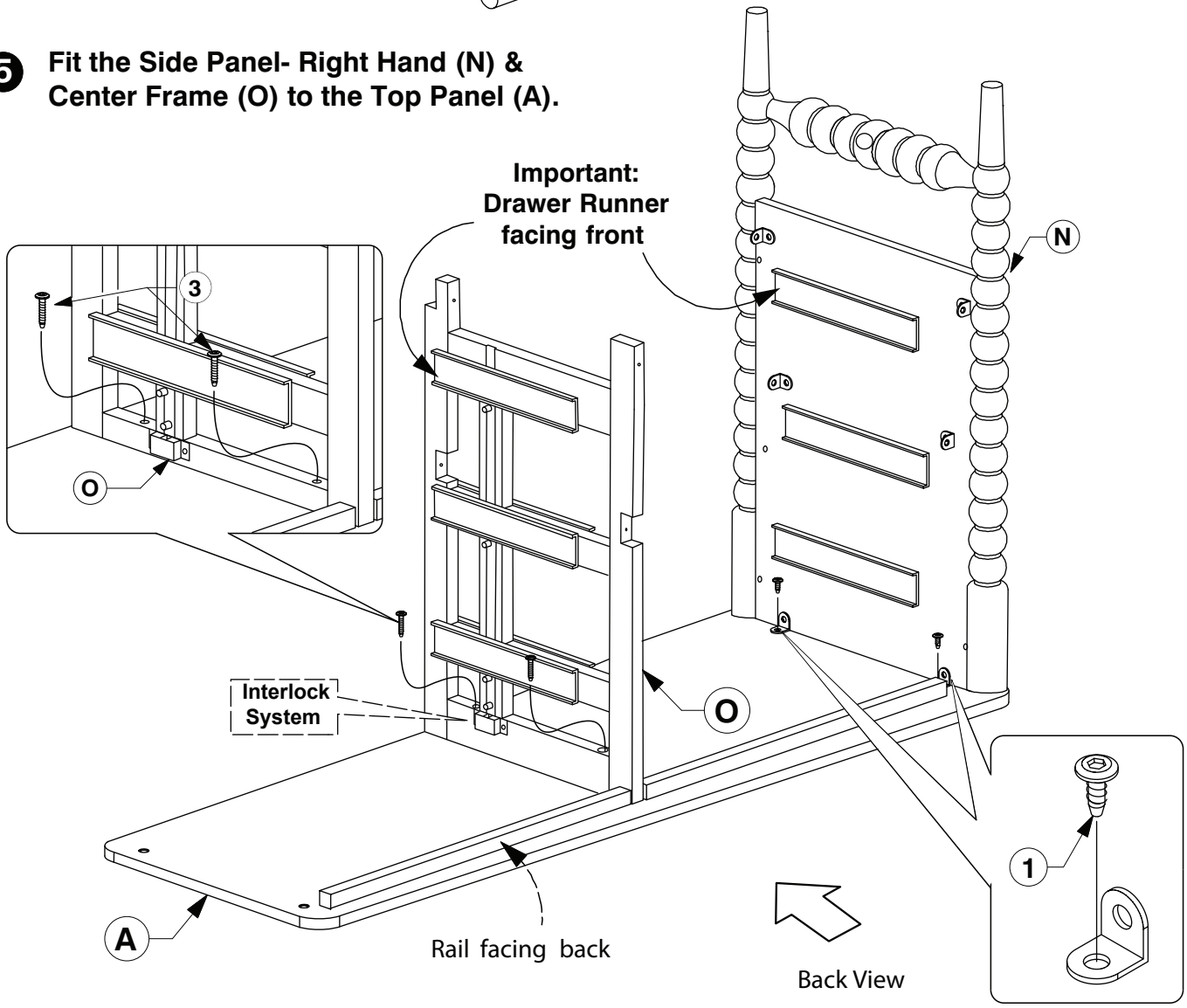

WI-1024

6 **Fit the Upper Support Bar (D) and Bottom Front & Rear Support Bars (G & H) to the Side Panel-Right Hand (N) & Center Frame (O) as shown.**
Use JCBCW (8) to fit the Lower Support Bar (L) to the Side Panel (N).

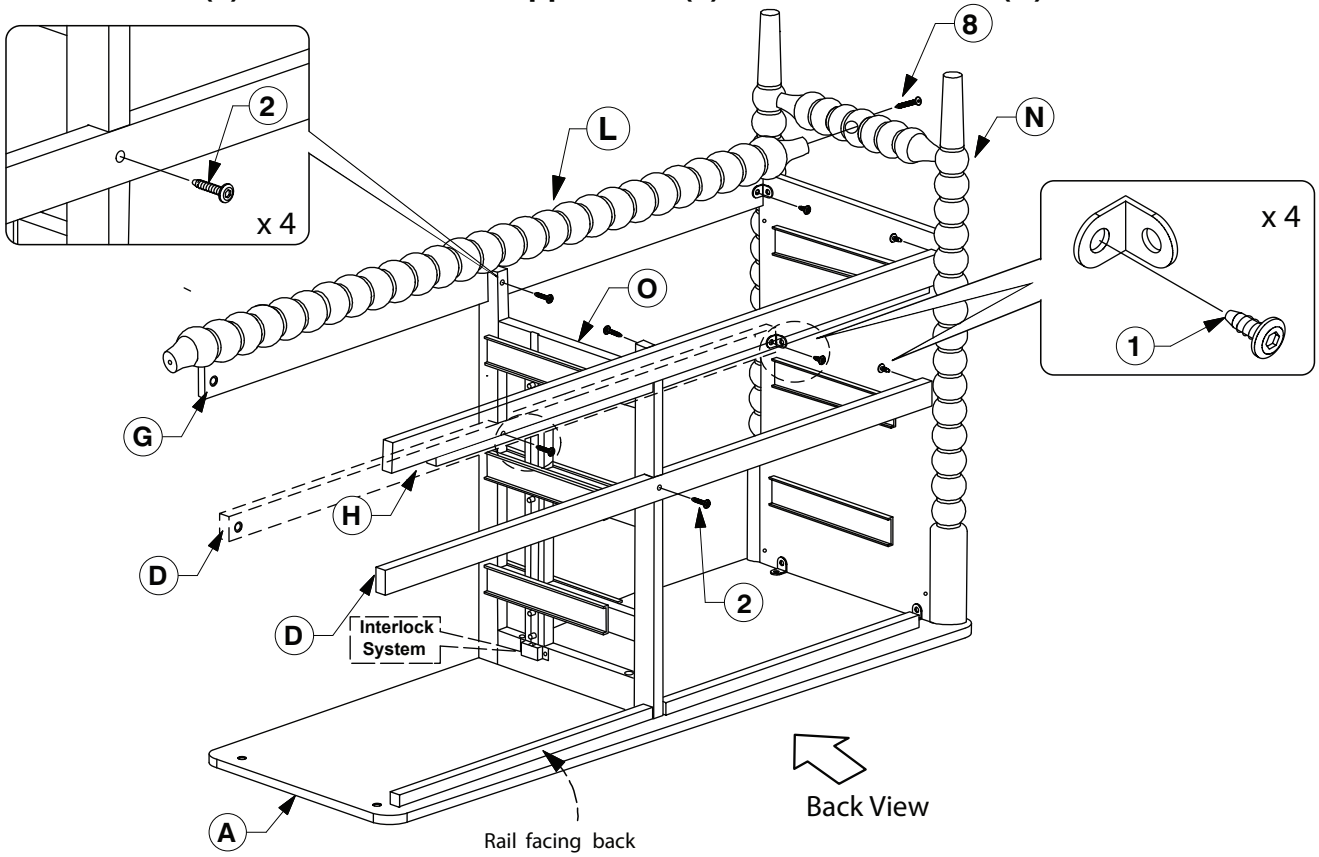

7 **Fit the other side of Side Panel- Left Hand (M) to the Top Panel (A) & Support Bar Upper & Bottom (D & G & H) and Lower Support Bar (L).**

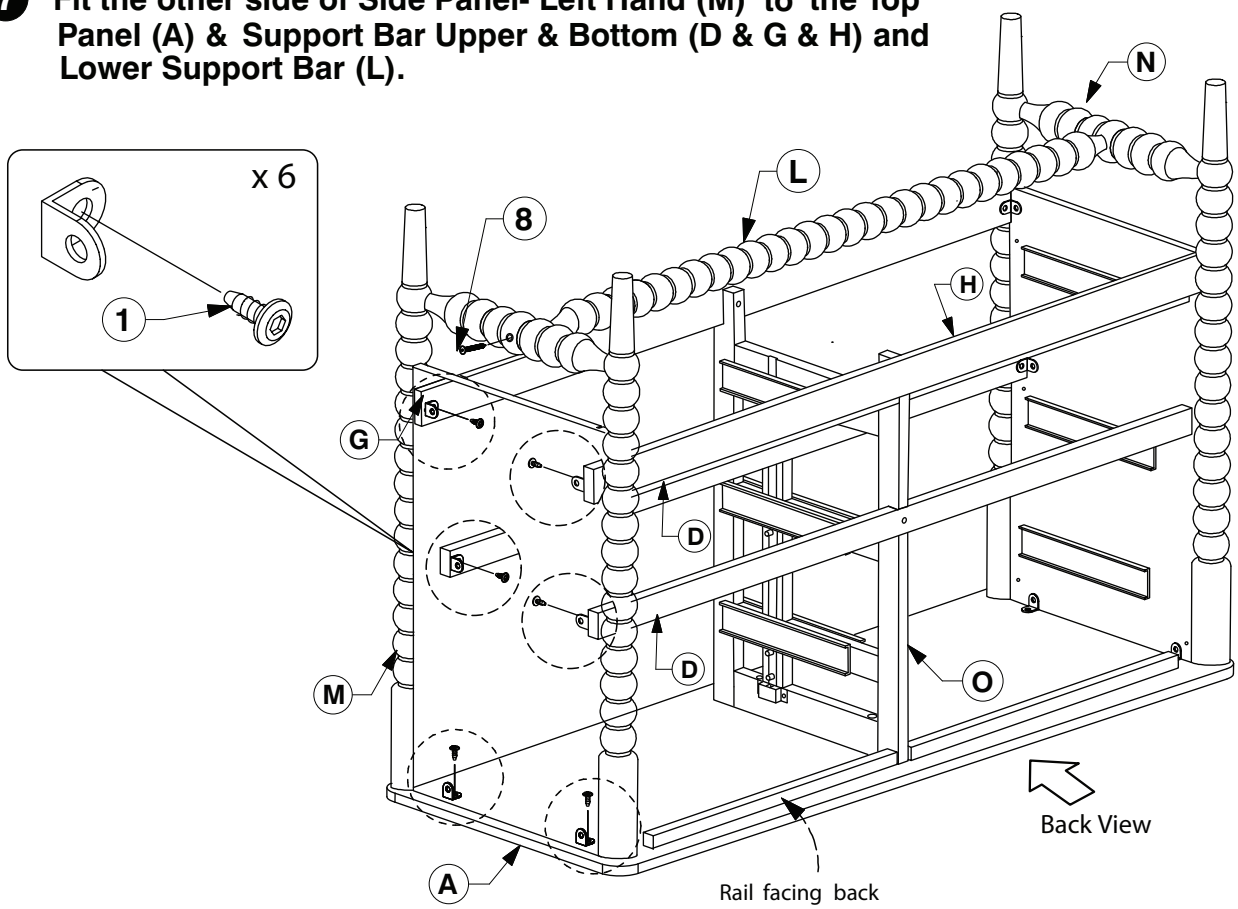

8 **Attached the Back Panel- wider (B) to the back of the Frame.**

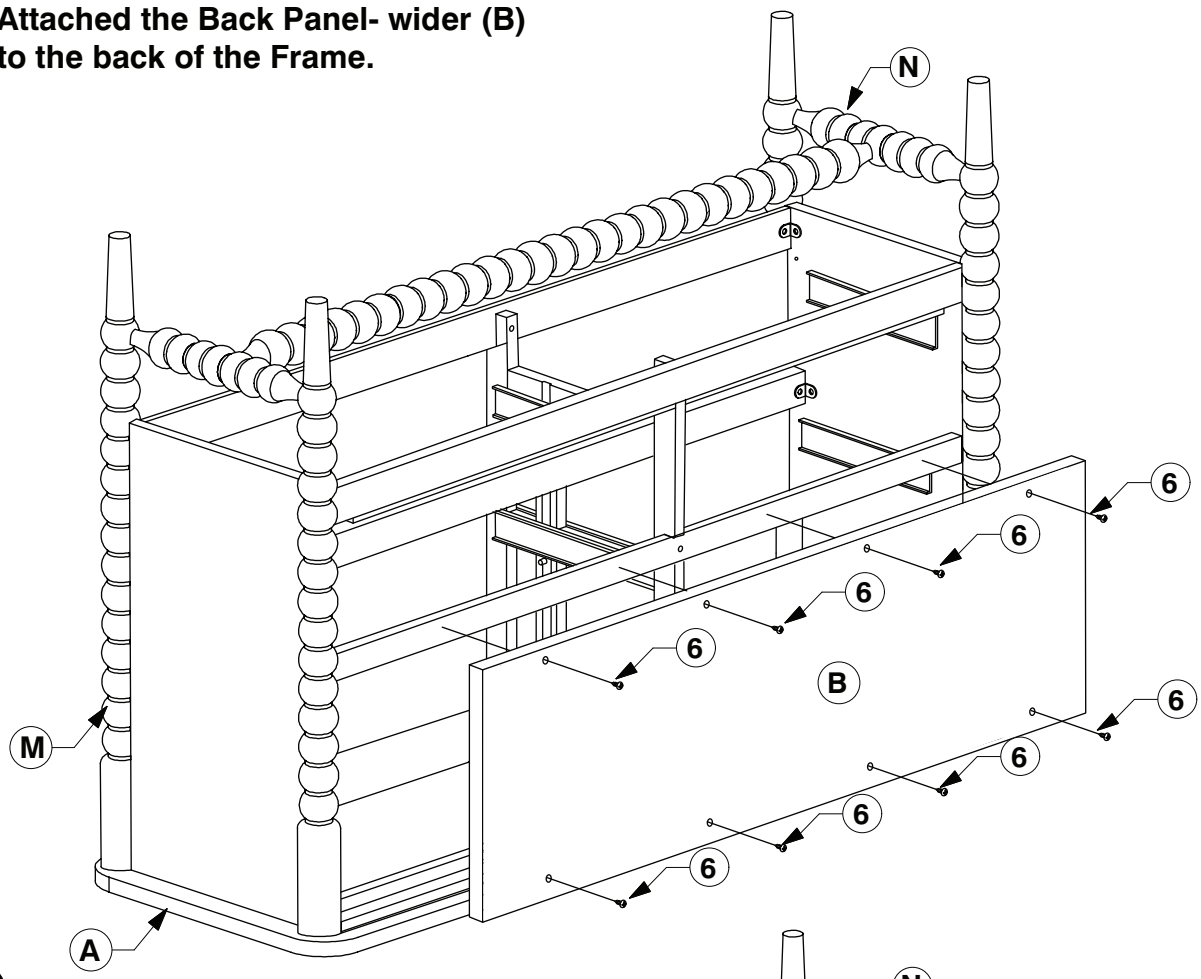

9 **Attached the Back Panel- narrow (E) to the back of the Frame.**

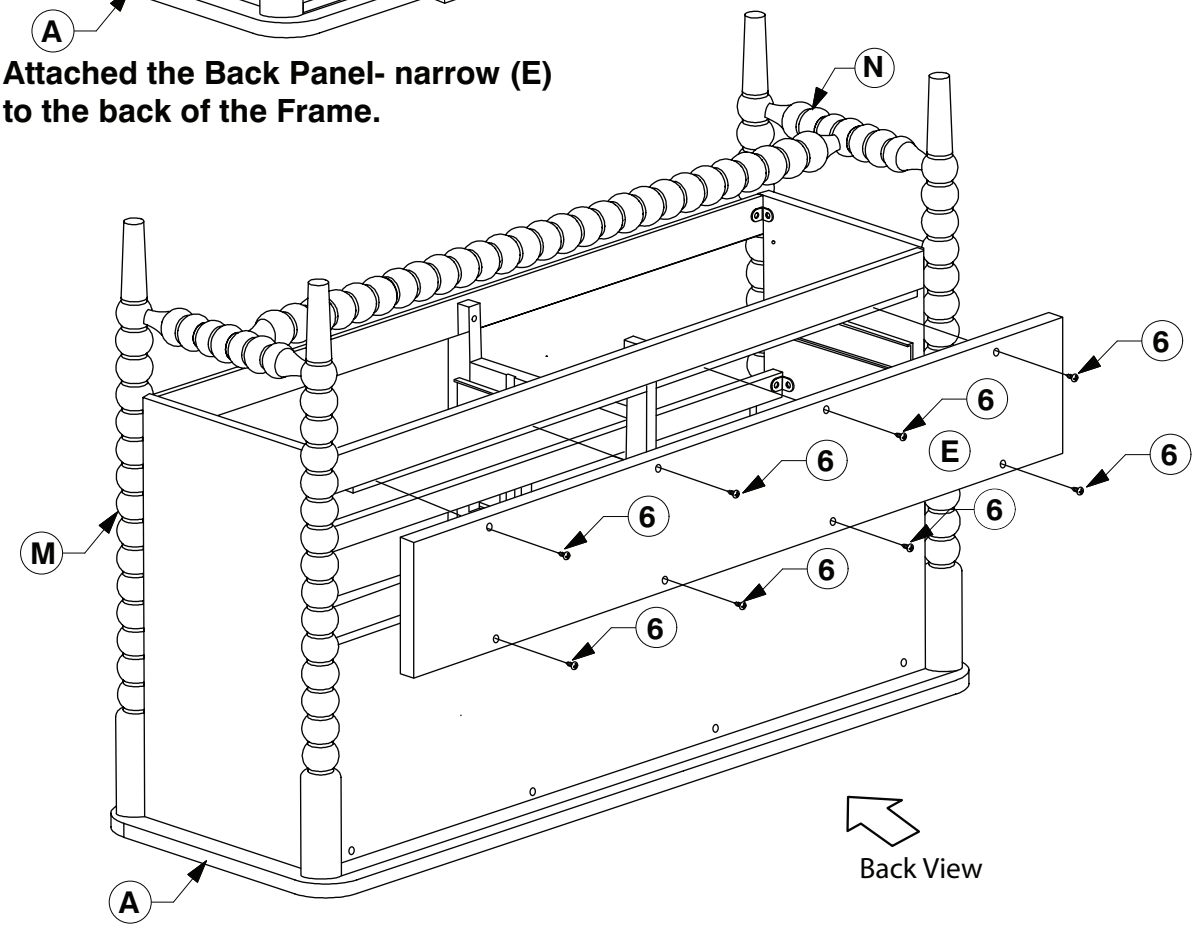

10 Install the Drawers.

LEFT

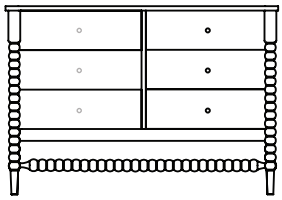

- Push the Interlock bar **upwards** before inserting the drawers.

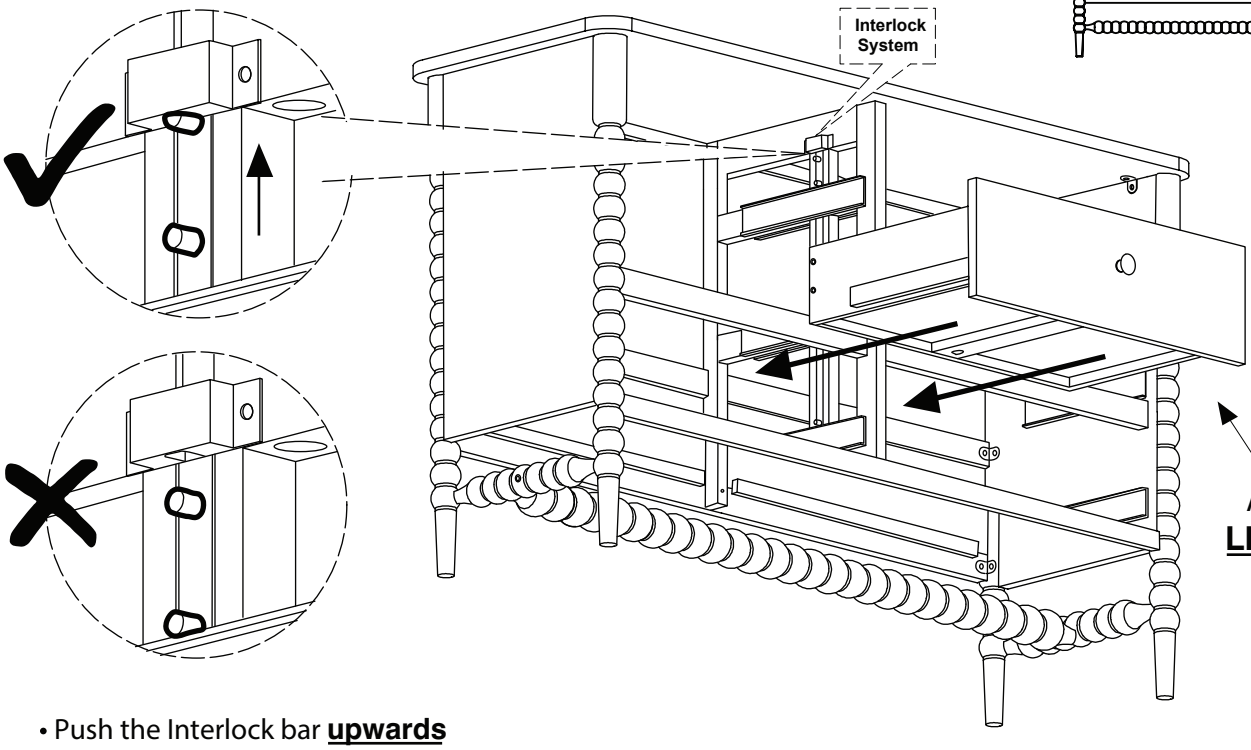

- Push the Interlock bar **upwards** before inserting the drawers.

RIGHT

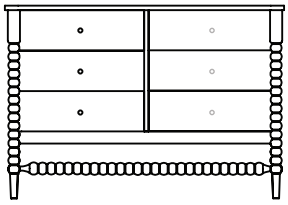

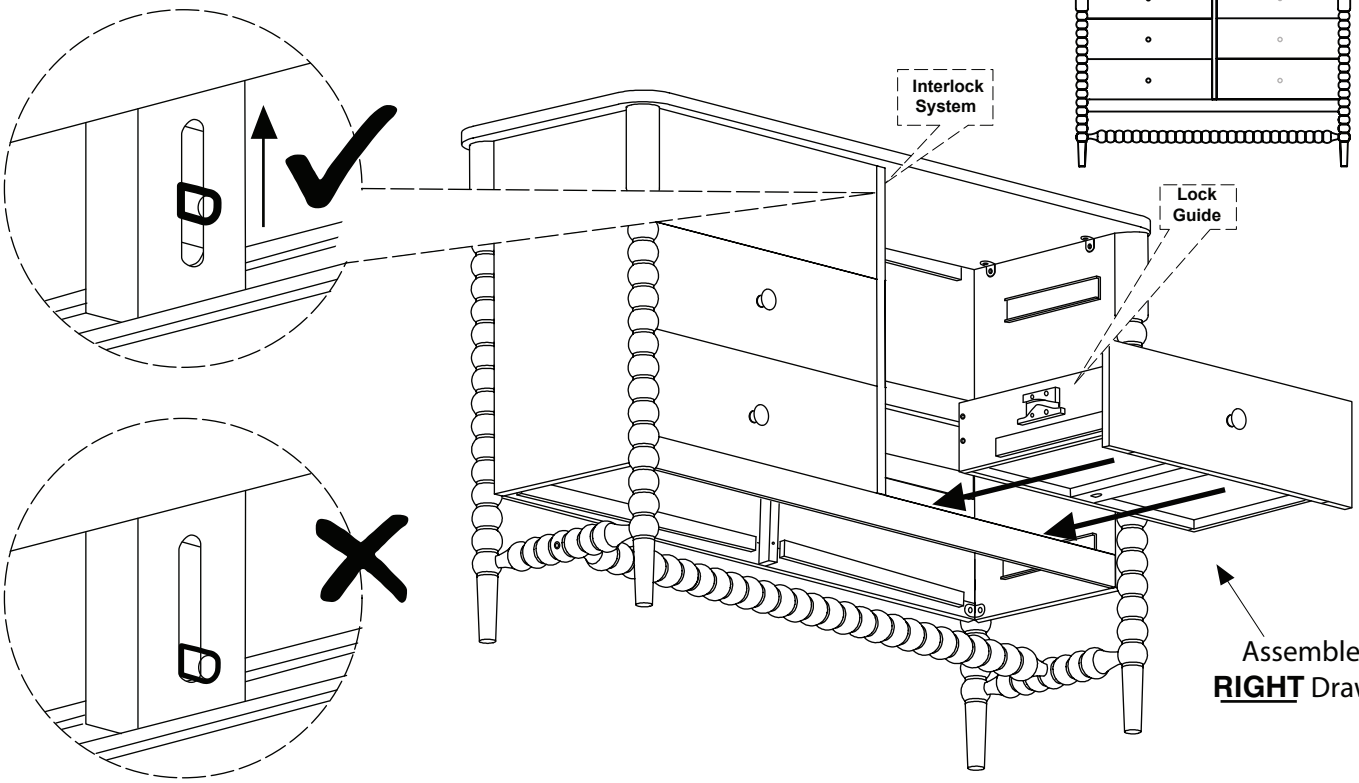

11 Adjust the Drawer Face (F).

✻ NOTE: Before fitting the Wood Screws . Lossen the JCBs on the Drawer Face if the face needs alignment .

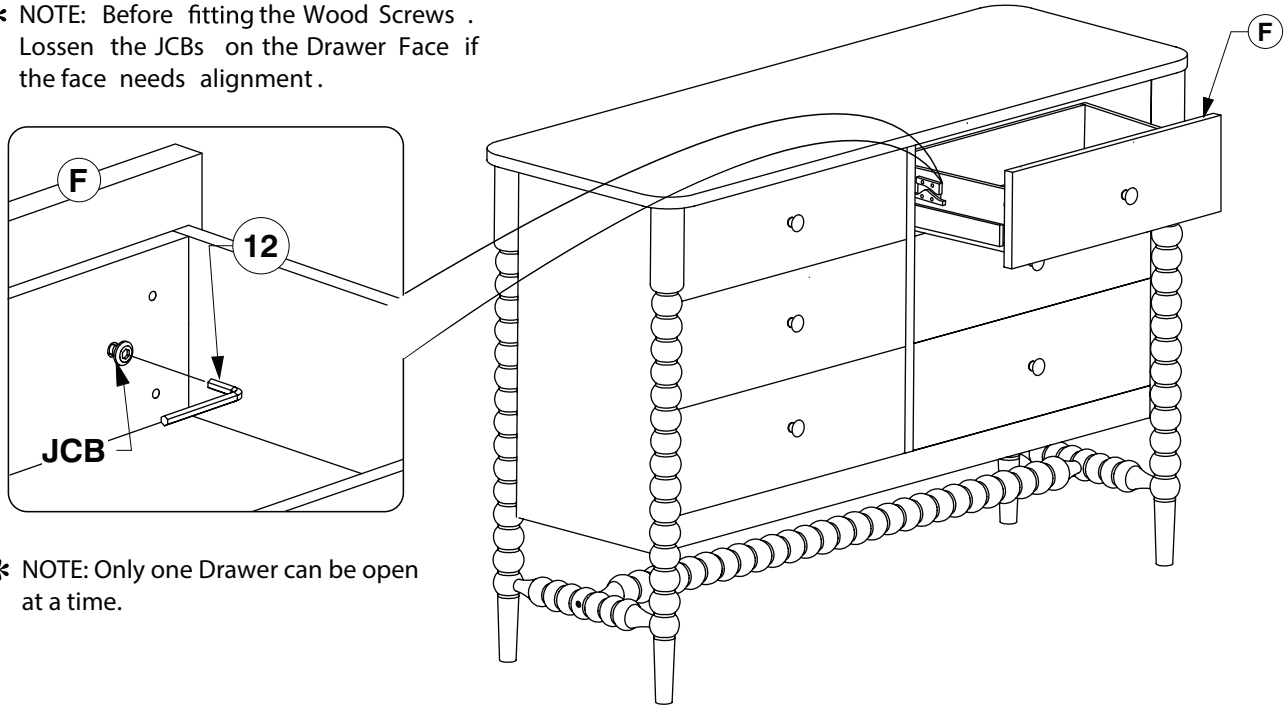

✻ NOTE: Only one Drawer can be open at a time.

12 After the Drawer Faces (F) are aligned, secure with wood screws.

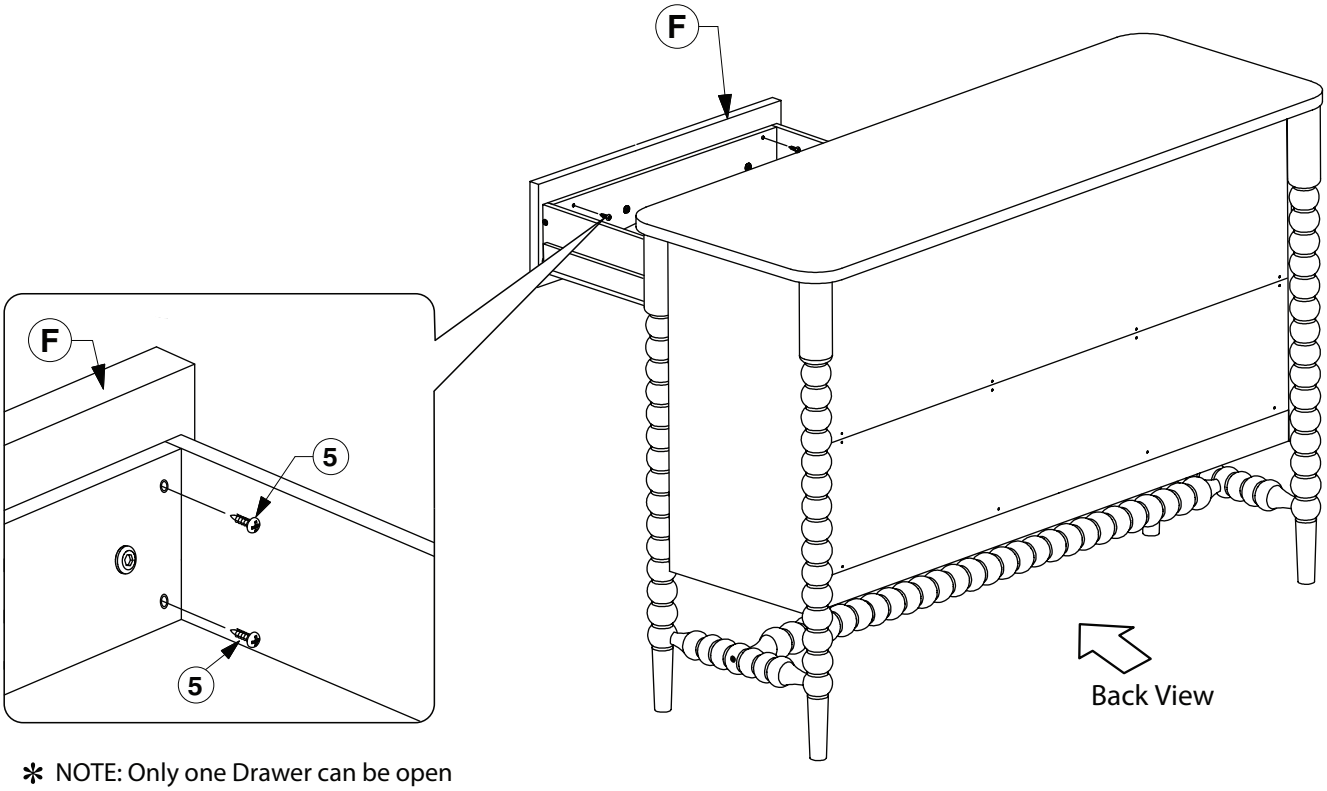

✻ NOTE: Only one Drawer can be open at a time.

13 Remove the Drawers.

- After removing the top drawer, push the interlock bar **down**. Then remove the lower drawers.

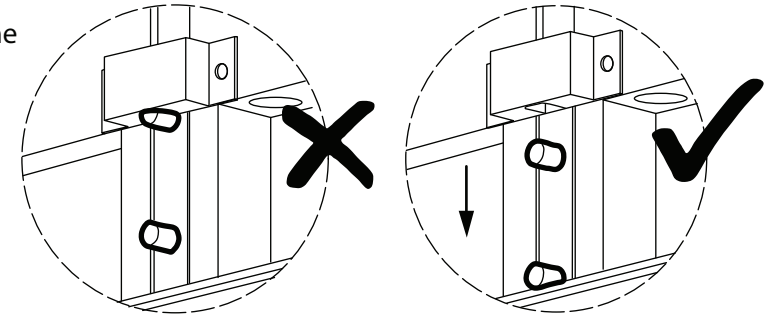

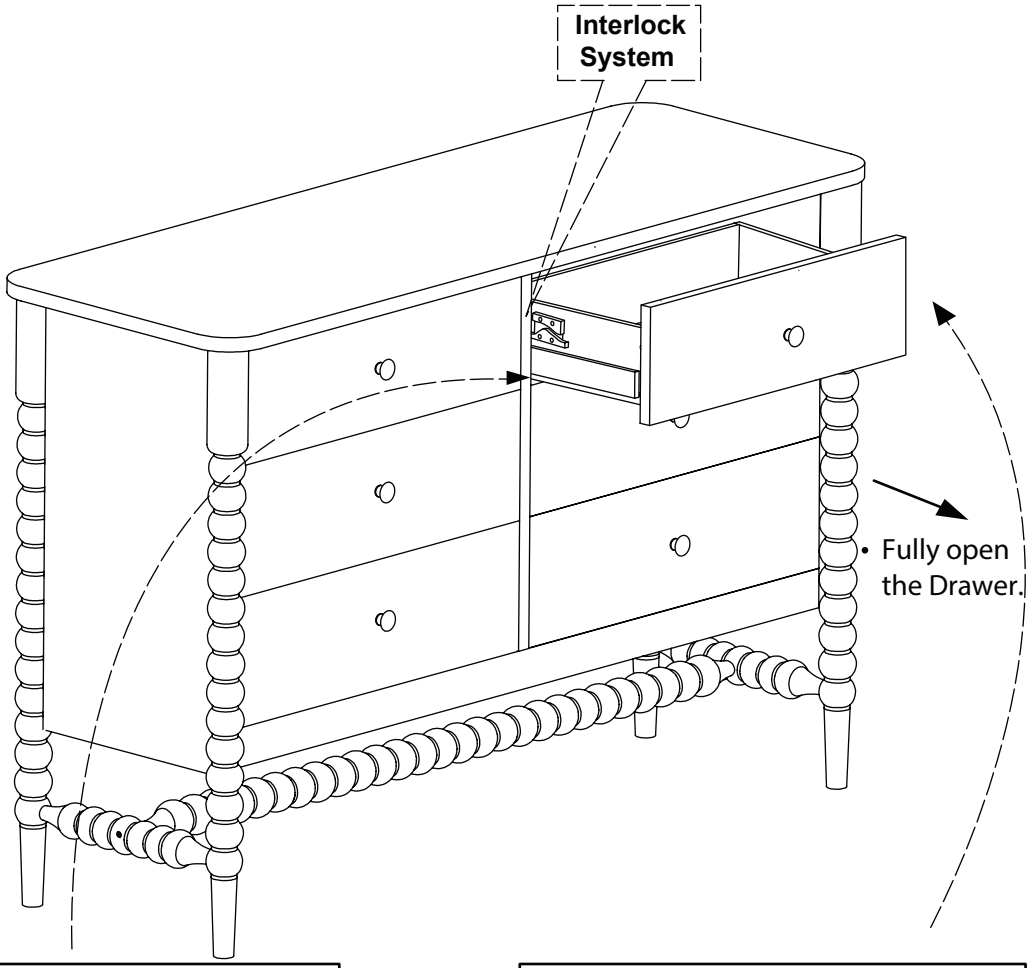

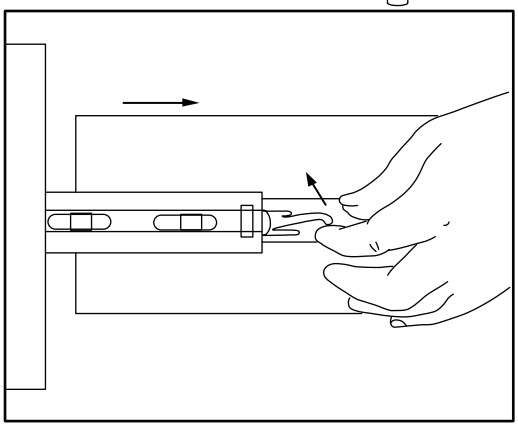

- Lift the **LEFT** side clip up.

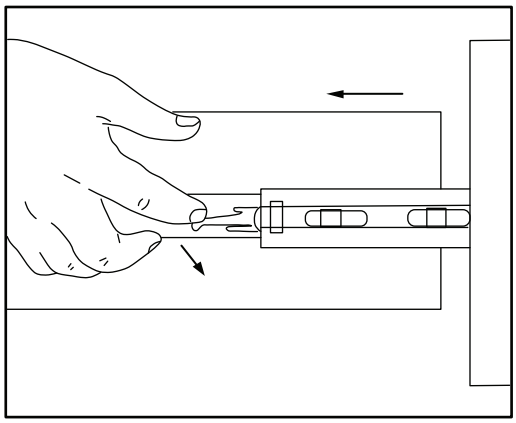

- Push the **RIGHT** side clip down.

9025 1 Drawer Night Stand

Assembly Instructions

WI-1025

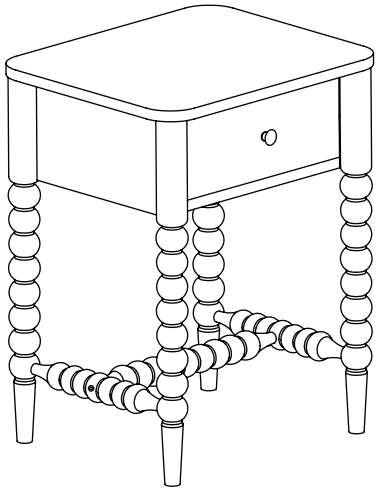

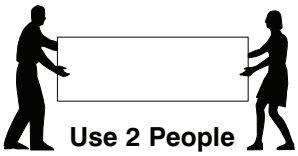

Note: Do not assemble using power tools. This can cause the bolts to be overtightened

1 Parts List

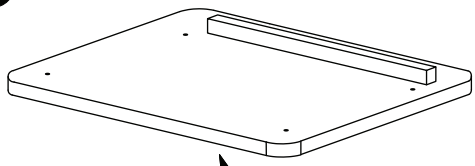

A Top Panel **x 1**

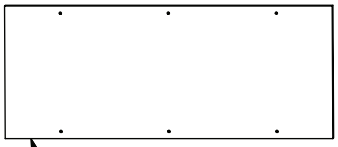

B Back Panel **x 1**

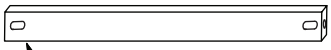

C Support Bar **x 2**

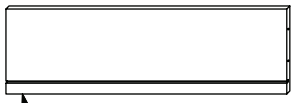

F Drawer Back **x 1**

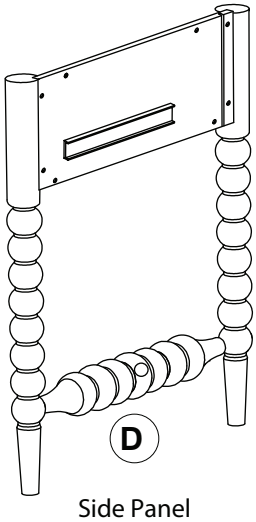

D Side Panel (Left Hand) **x 1**

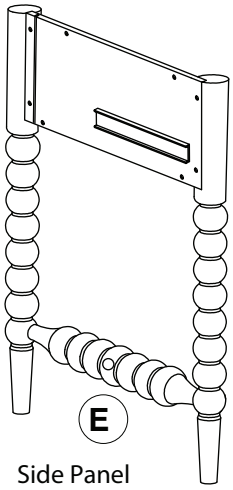

E Side Panel (Right Hand) **x 1**

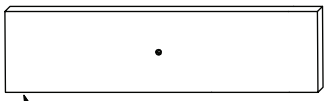

G Drawer Face **x 1**

H Drawer Bottom **x 1**

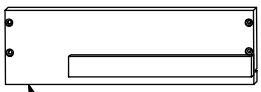

J Drawer Side (Left Hand) **x 1**

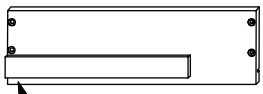

K Drawer Side (Right Hand) **x 1**

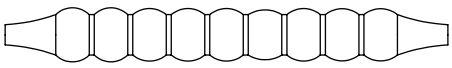

L Bottom Support Bar **x 1**

9025 1 Drawer Night Stand

Assembly Instructions

WI-1025

2 Hardware List

1 M6 x 15mm JCB **x 8**

2 M6 x 30mm JCB **x 4**

3 'L' Bracket (5005-3) **x 4**

4 M4 x 20mm Wood Screw **x 4**

5 M4 x 16mm Wood Screw **x 6**

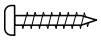

6 M4 x 25mm Wood Screw **x 8**

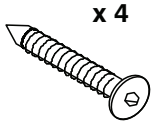

7 M6 X50mm JCBC W **x 2**

8 Handle **x 1**

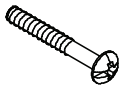

9 M4 x 22mm Wood Screw **x 1**

10 Allen Key **x 1**

3 Assemble the Drawer Sides (J & K) to the Drawer Face (G).

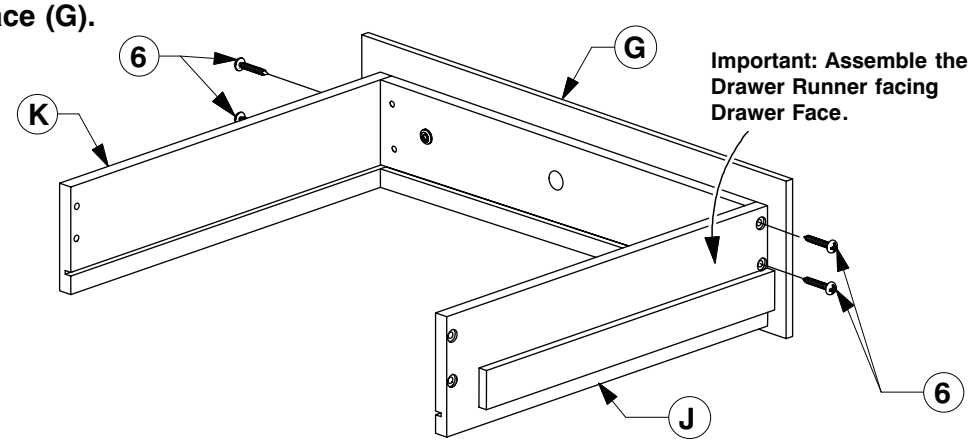

4 Slide the Drawer Bottom (H) into the groove on the Drawer Sides (J & K).

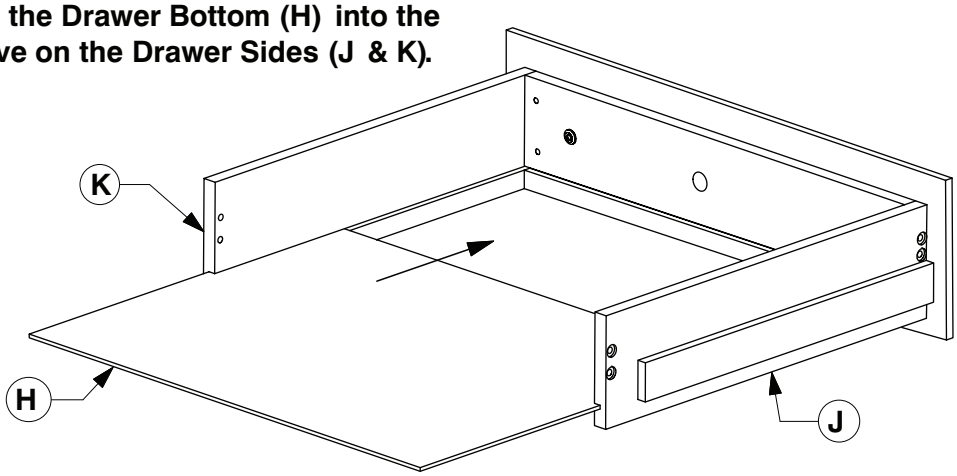

5 Assemble the Drawer Back (F) to the Drawer Sides (J & K). Fit the Handle to the Drawer Face (G).

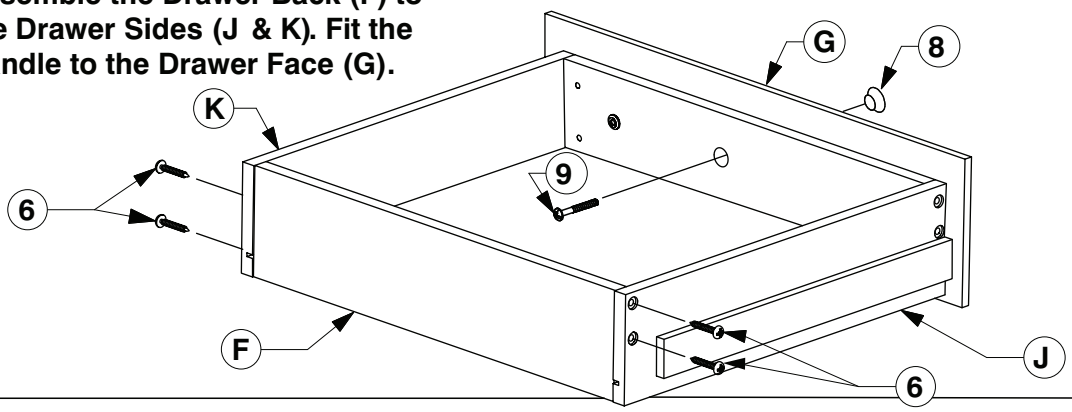

9025 1 Drawer Night Stand

Assembly Instructions

WI-1025

6 **Fit the 'L' Bracket (3) to the Side Panel (D & E).**

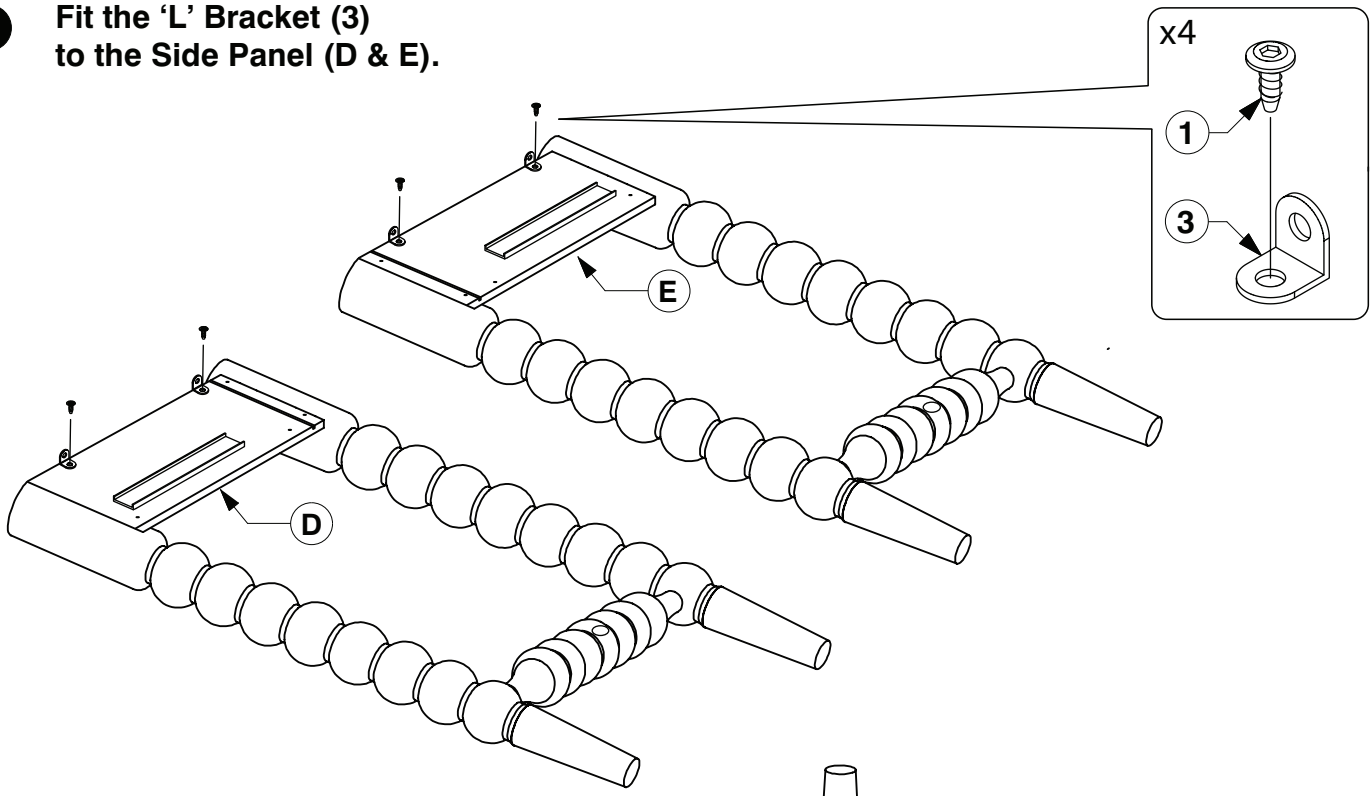

7 **Assemble the Side Panel (D) to the Top Panel (A).**

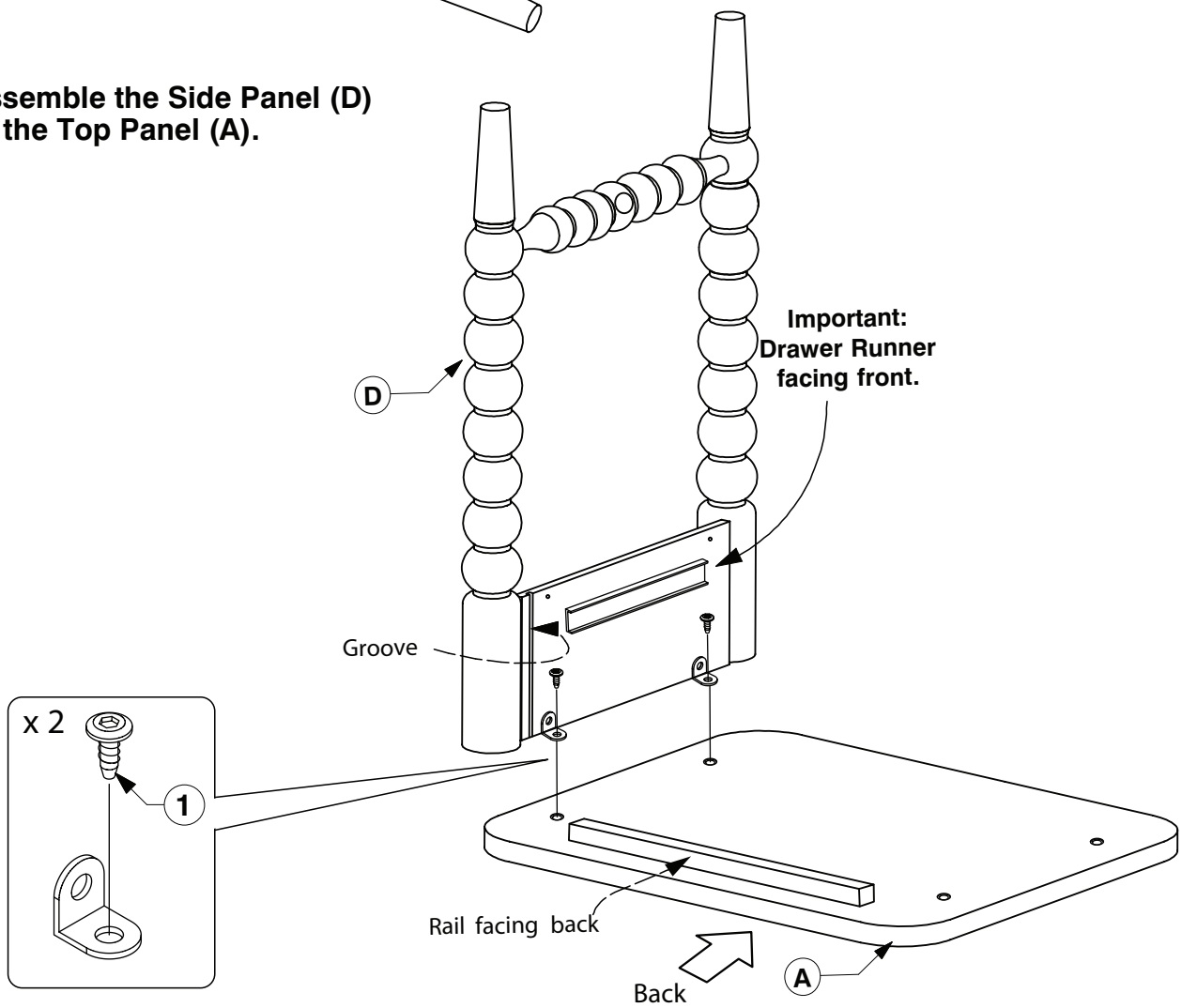

9025 1 Drawer Night Stand

Assembly Instructions

WI-1025

8 Fit the Bottom Support Bar (L) & Support Bar (C) to the Side Panel (D).

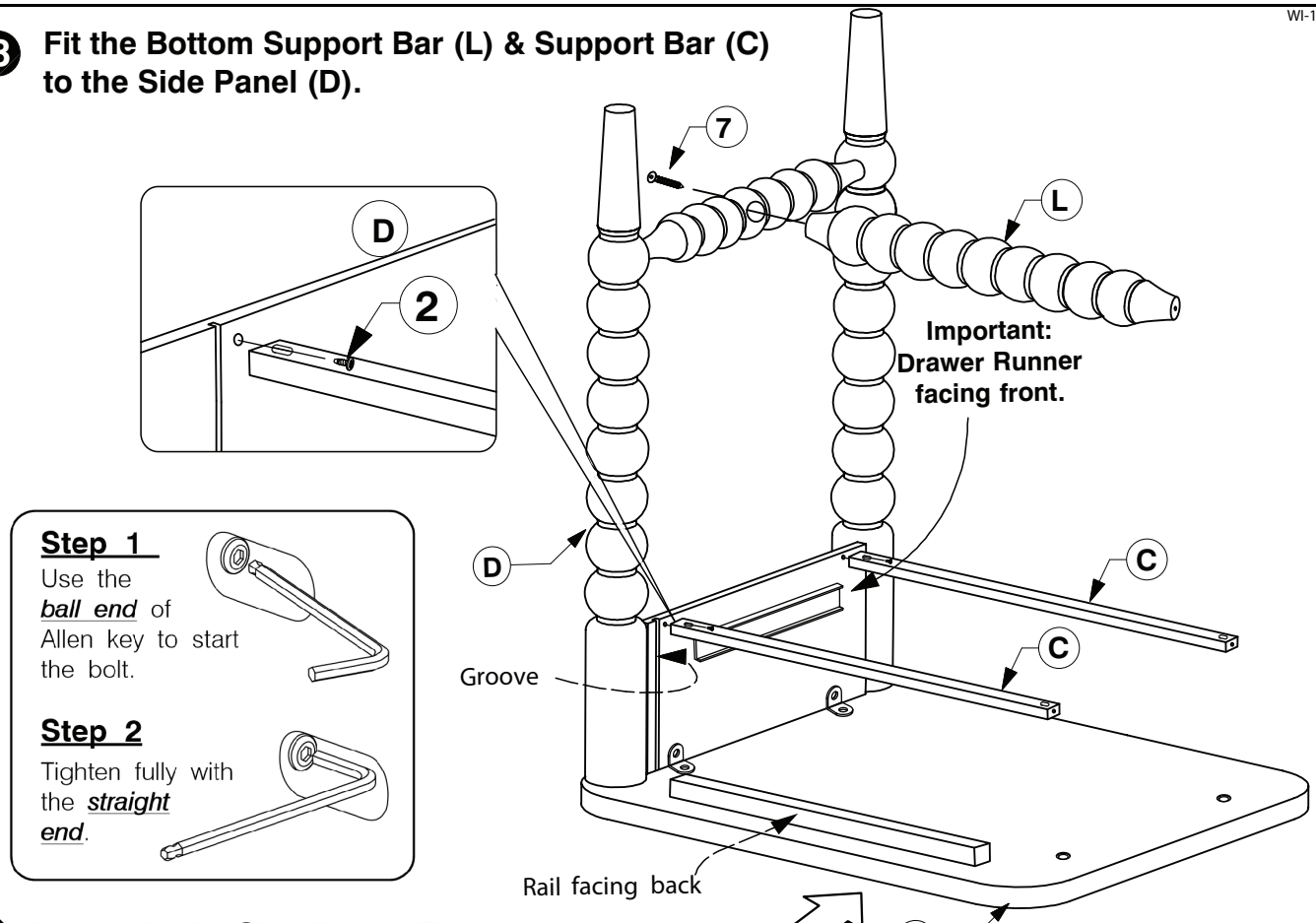

9 Assemble the Side Panel (E) and to the Bottom Support Bar (L) ans Support Bar (C) Top Panel (A).

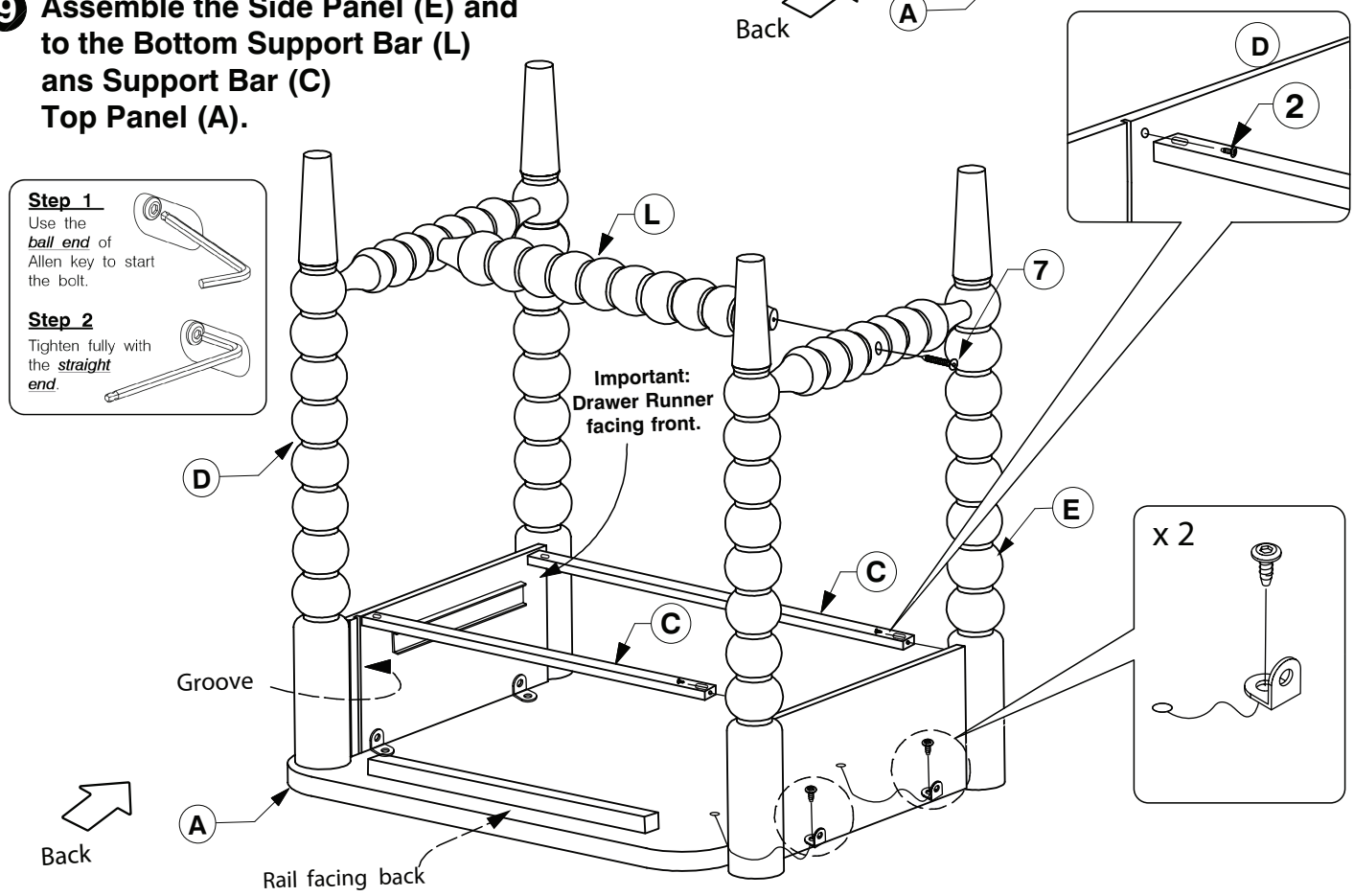

10 **Slide the Back Panel (B) into the groove on the back of the Side Panel (D & E)**

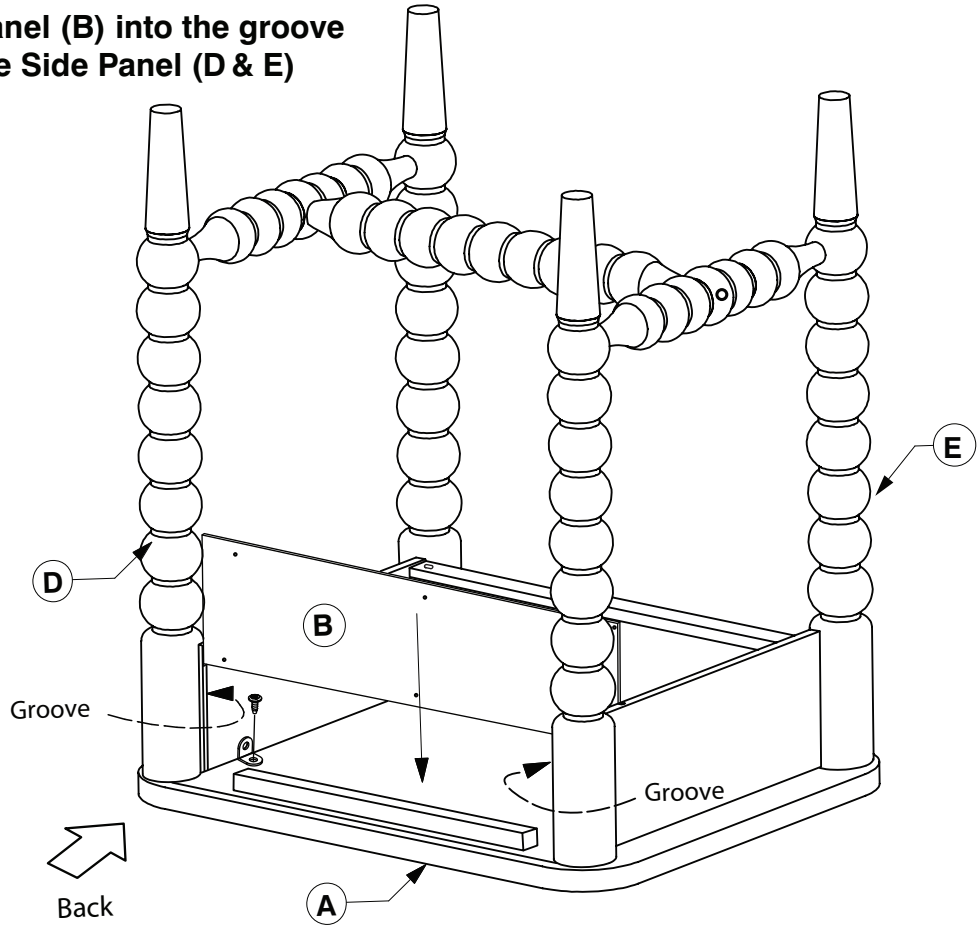

11 **Screw the Back Panel (B) to the Side Panel (D & E).**

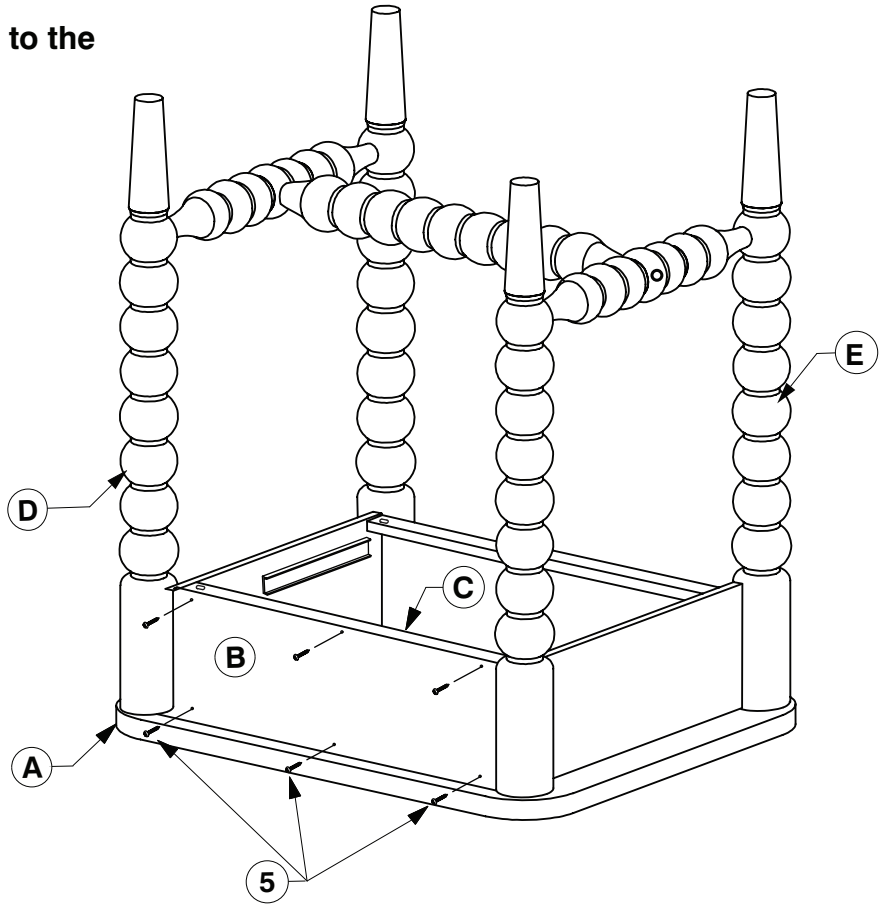

12 Fit the Drawer Box to the Casegood Body.

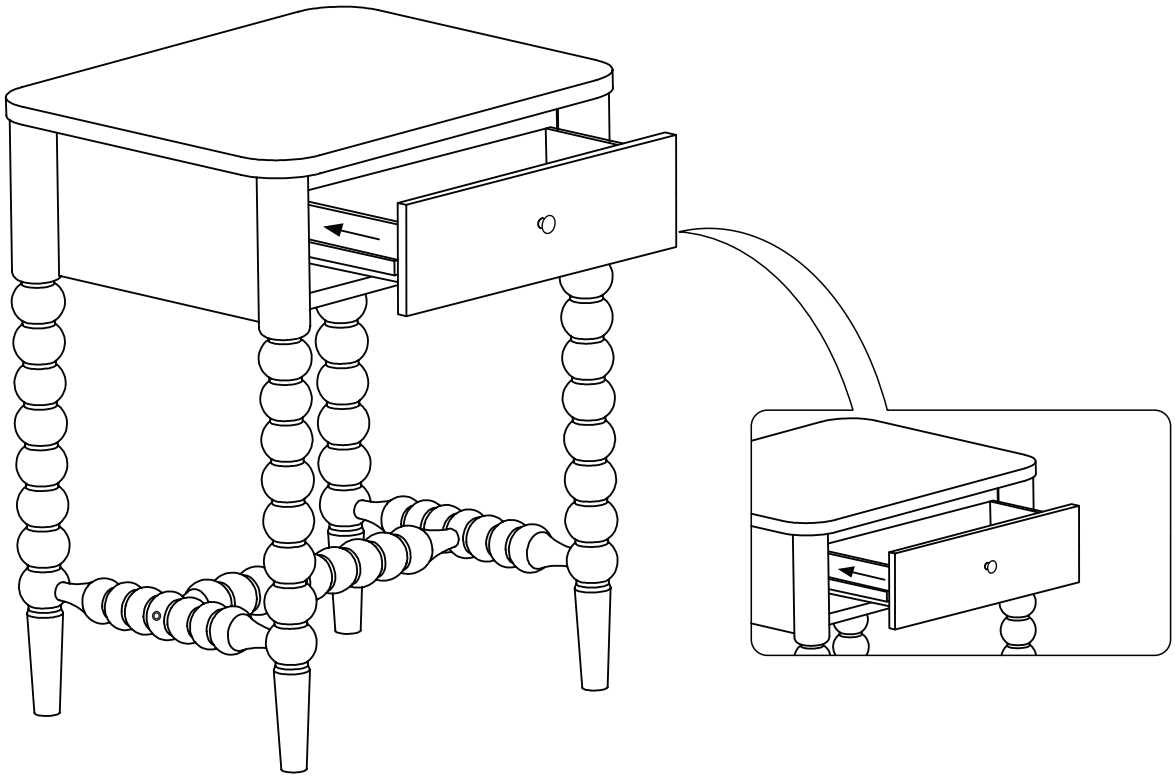

13 Adjust the Drawer Face (G).

✻ NOTE: Before fitting the Wood Screws . Lossen the JCBs on the Drawer Face if the face needs alignment .

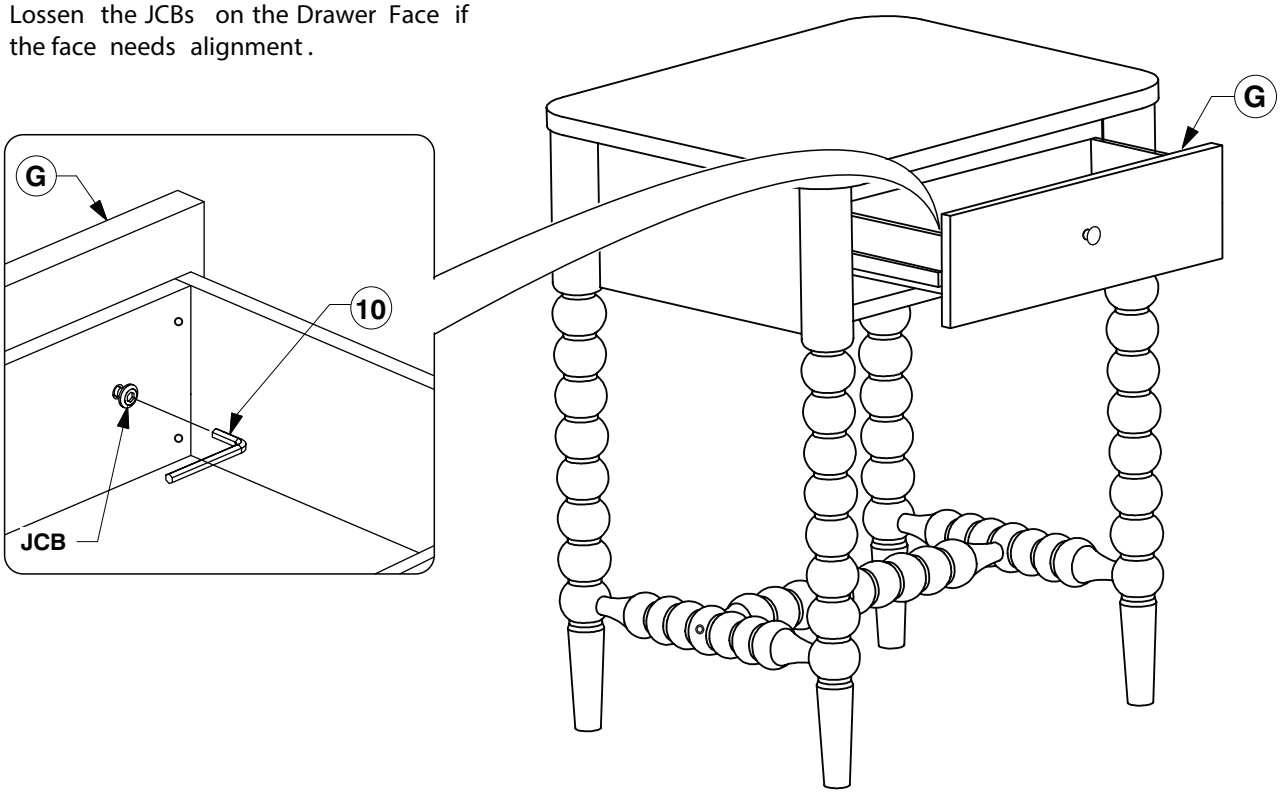
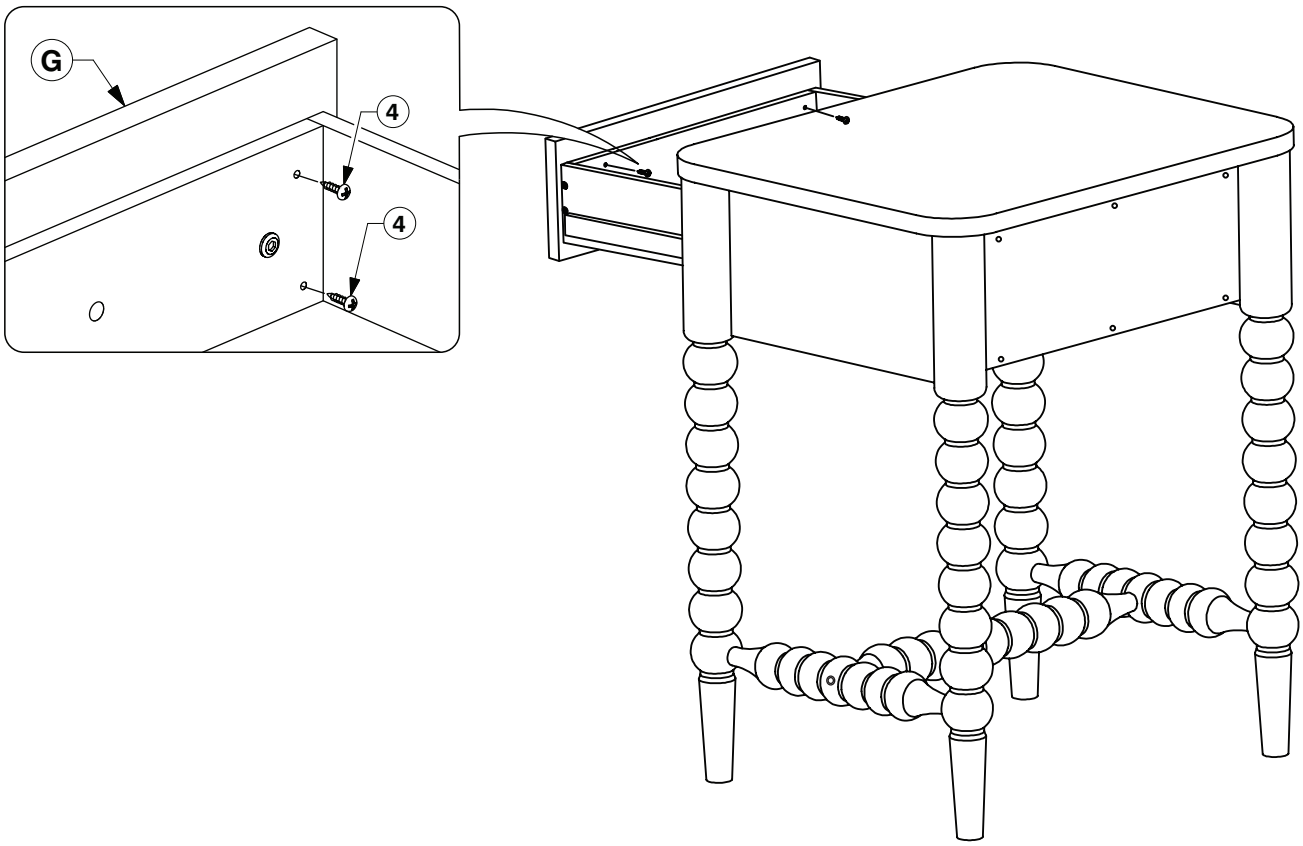
14 After the Drawer Faces (G) are aligned, secure with wood screws.