ASSEMBLY INSTRUCTION

MODEL : 253C

Read this instruction carefully. Remove all wrapping material, staples and straps from the carton. See hardware and furniture part list for guidance. Be sure you have all wooden furniture parts on a clean and flat soft surface, such as a carpet or rug, to prevent from being scratched.Follow the figure to start assembling.

CAUTION :

1. Do not FULLY - TIGHTEN the nut or screw untill all is ready to assemble.
2. Do not OVER - TIGHTEN the nut or screw to avoid causing damages to the thread.
3. Keep all hardware part out reach of children.

NO	PART LIST	QTY
A	BACK REST	1 PC
B	FRONT LEG	1 PC
C	SIDE RAIL	2 PCS
D	BENT WOODEN SEAT	1 PC
E	CENTER SUPPORT	1 PC
F	WOOD BUTTON	4 PCS

NO	DESCRIPTION	QTY
1	JCBC SCREW M6 X 70MM	4 PCS
2	JCBC SCREW M6 X 50MM	2 PCS
3	SPRING WASHER	6 PCS
4	WOOD DOWEL Ø8 x 30MM	4 PCS
5	CSK SCREW M4 x 30MM	4 PCS
6	M4 ALLEN KEY	1 PC

STEP 1.1

Firstly, stick E to C for both left and right side.

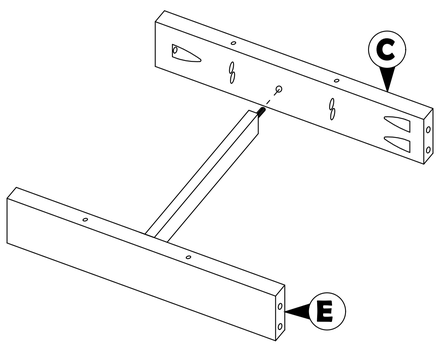

STEP 1.2

Then, attached STEP 1.1 to B according to the hole and tighten it using hardware number 2,3,4 and 6.

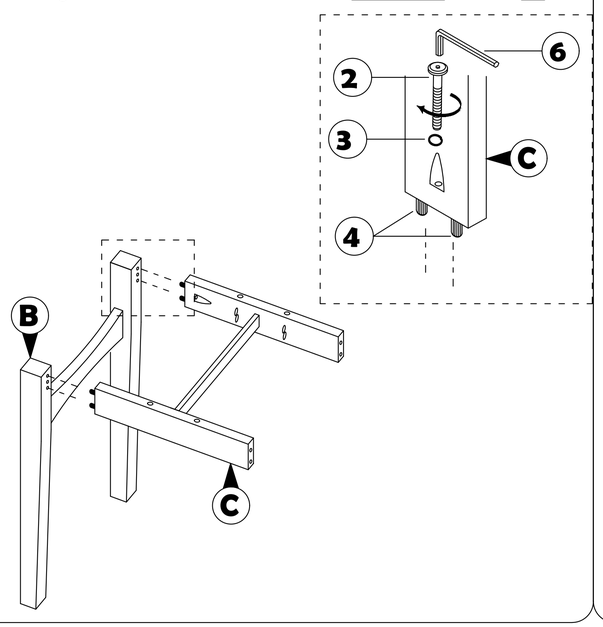

STEP 2

Continued with combine the whole part from STEP 1.2 to A . Tighten the part of C and A using hardware number 3, 1 and 6 . Then cover the hole with F.

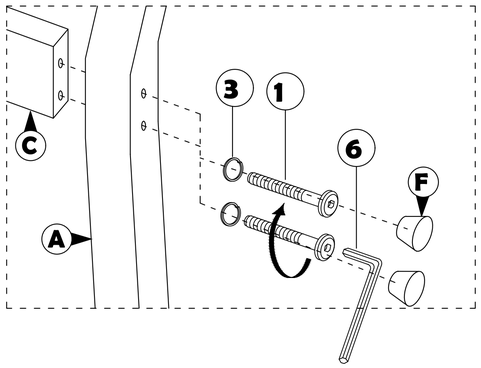

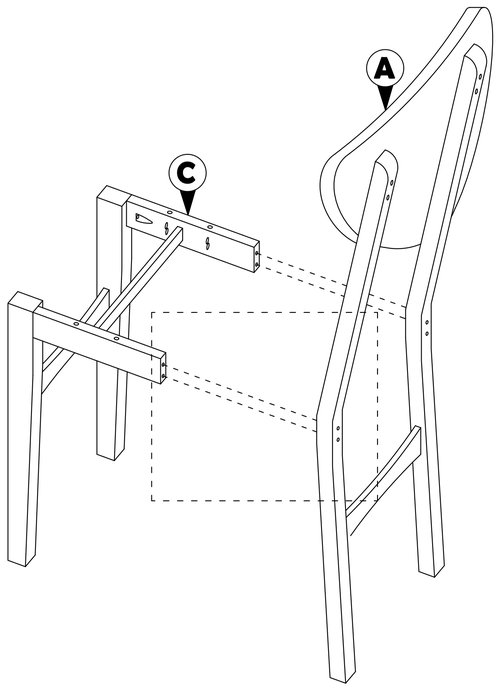

STEP 3

Stick the whole assemble part to D according to the marked and fully-tighten it with hardware number 5 .

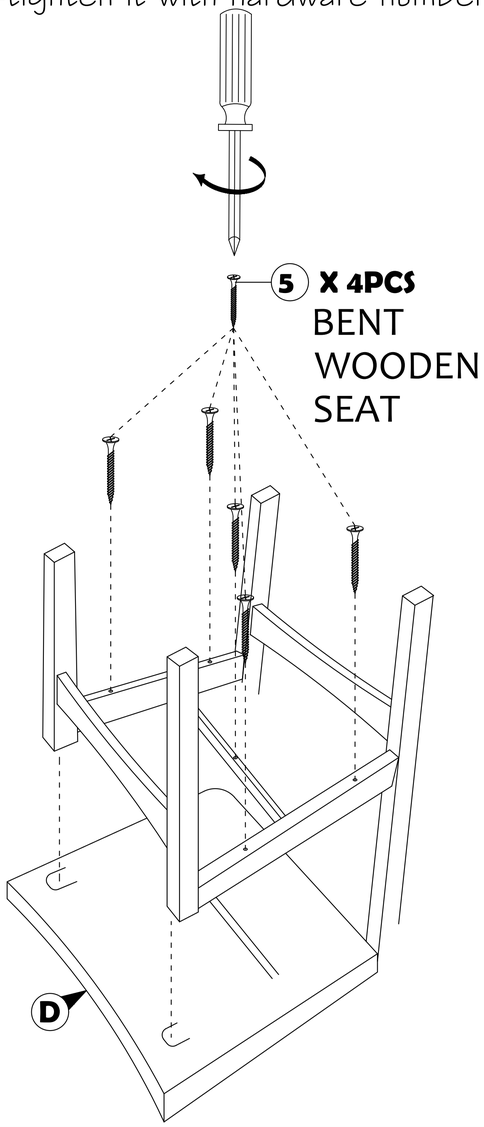

STEP 4

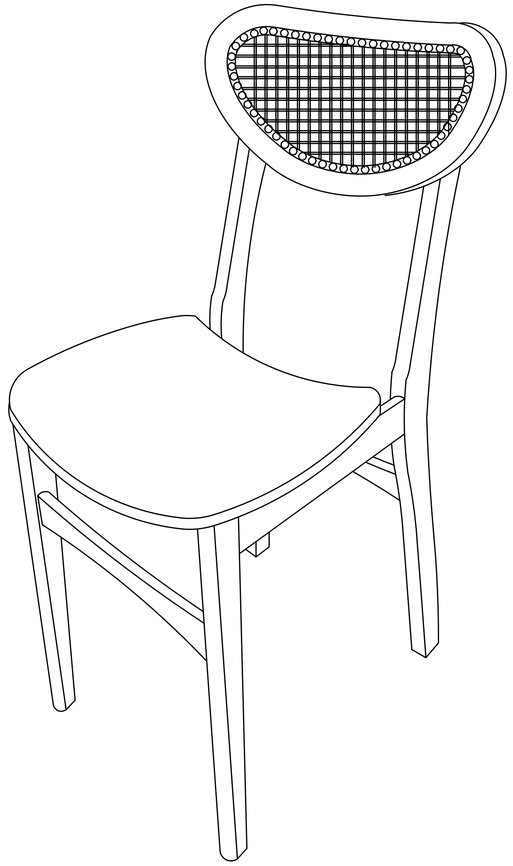

COMPLETE ASSEMBLE

ASSEMBLY INSTRUCTION

MODEL : 7231T

Read this instruction carefully. Remove all wrapping material, staples and straps from the carton. See hardware and furniture part list For guidance. Be sure you have all wooden furniture parts on a clean and flat soft surface, such as a carpet or rug, to prevent from being scratched.Follow the figure to start assembling.

CAUTION :
1. Do not FULLY - TIGHTEN the nut or screw until all is ready to assemble.
2. Do not OVER - TIGHTEN the nut or screw to avoid causing damages to the thread.
3. Keep all hardware part out reach of children.

NO	PART LIST	QTY
A	TABLE TOP	1 PC
B	PEDESTAL TABLE CENTER	1 PC
C	PEDESTAL LEGS	4 PCS
D	CROSS BAR 'X'	2 PCS
E	BOX COVER	1 PC

NO	DESCRIPTION	QTY
1	CSK SCREW M4 X 30MM	16 PCS
2	HEX. NUT	8 PCS
3	FLAT WASHER	8 PCS
4	SPANNAR	1 PC
5	ADJUSTER	4 PCS

STEP 1.1

Firstly, connect C to B according to the hole using hardware number 2,3 and 4.

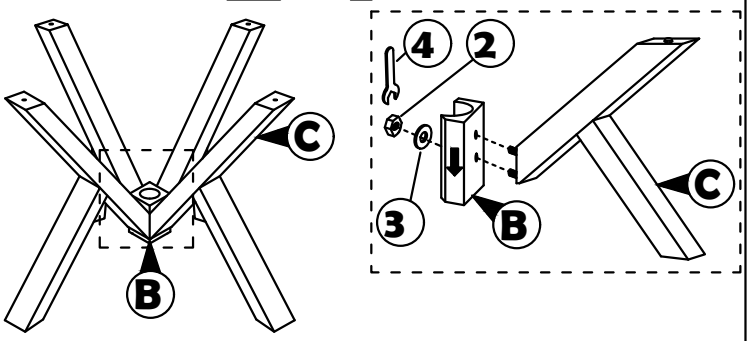

STEP 1.2

Then, attached 4 pieces hardware number 5 to part C.

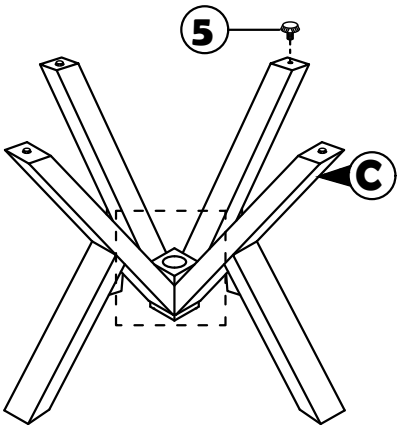

STEP 2.1

Put part E to B align to the nut provided.

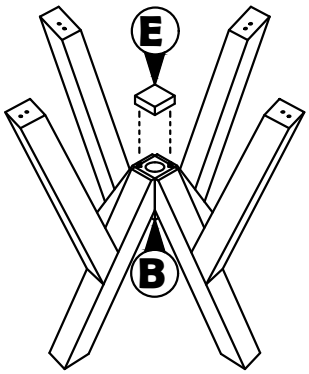

STEP 2.2

Align part D to C accordingly and tighten it using hardware number 1.

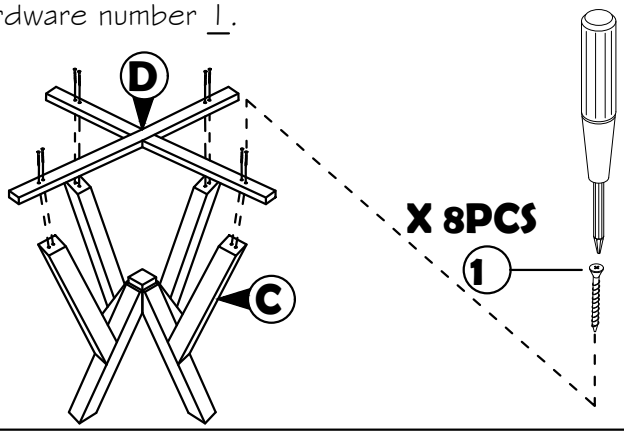

STEP 4

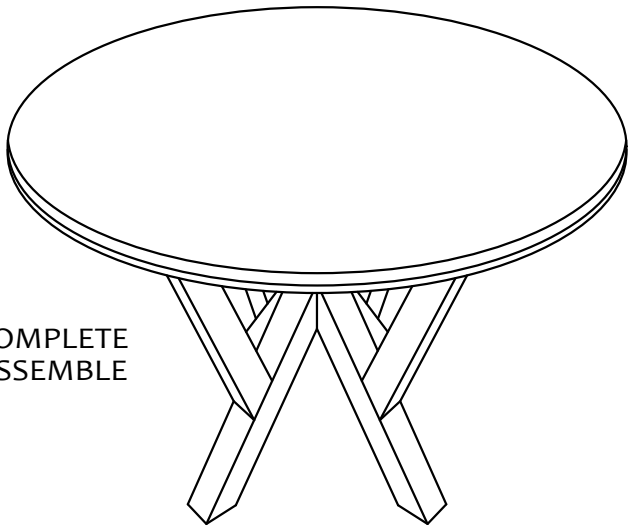

COMPLETE ASSEMBLE

STEP 3
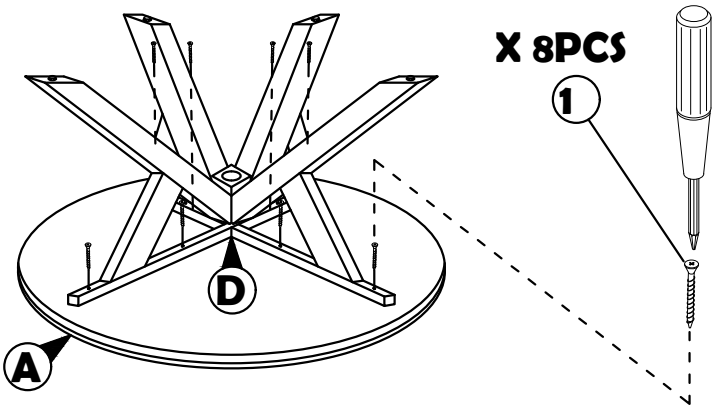
Align part D to A ; make it center and tighten it using hardware number 1.