ASSEMBLY INSTRUCTIONS

MODEL :RONI FULL BED

NO	Hardware	QTY
1	JCBC M6 X 80 mm	11
2	BARRET NUT	11
3	WOOD DOWEL M8 X 30 mm	4
4	CSK M4 x 25mm	24
5	ALLEN KEY - M4	1
6	BASE GLIDE	3

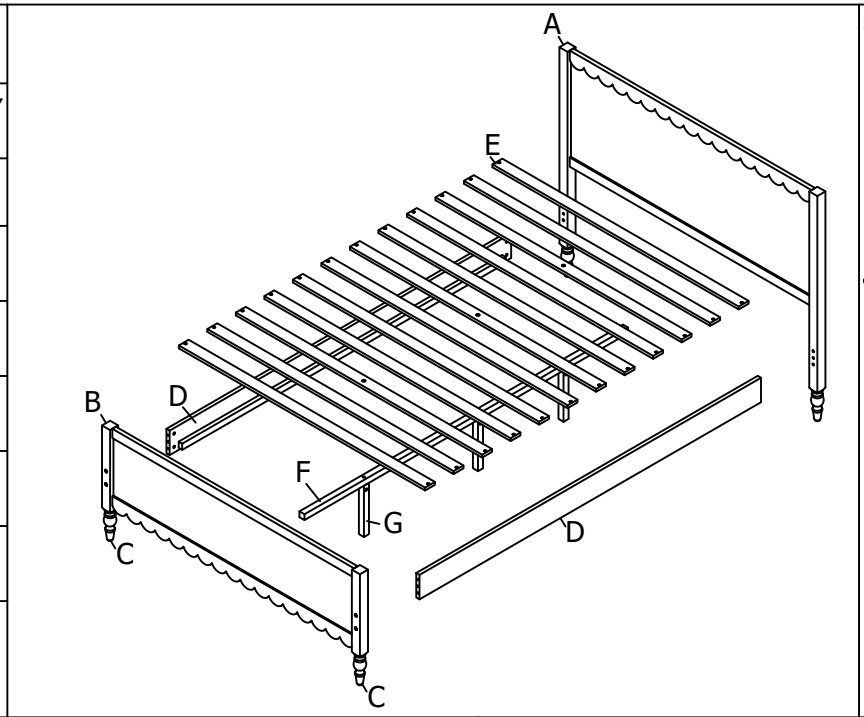

STEP 1

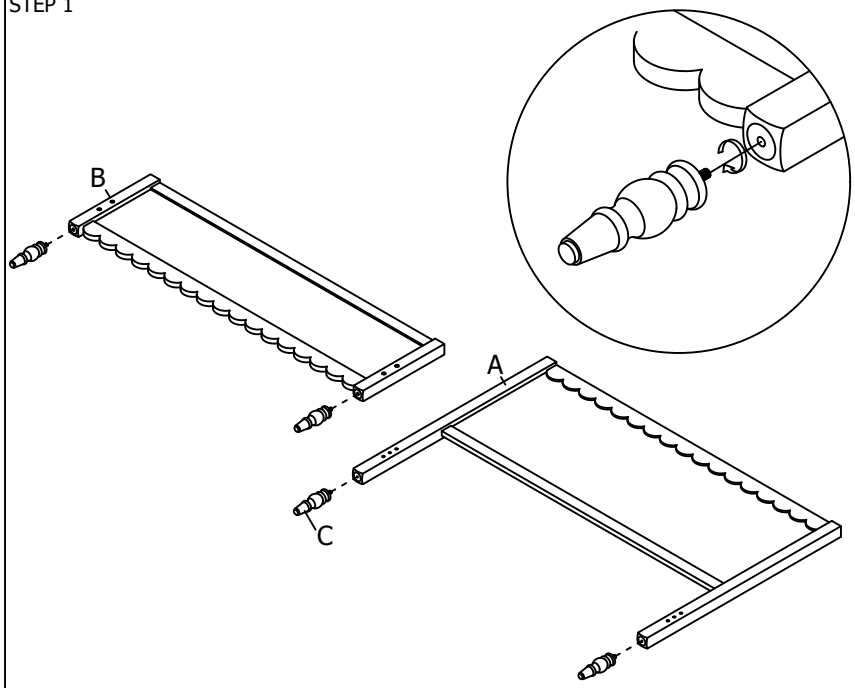

STEP 2

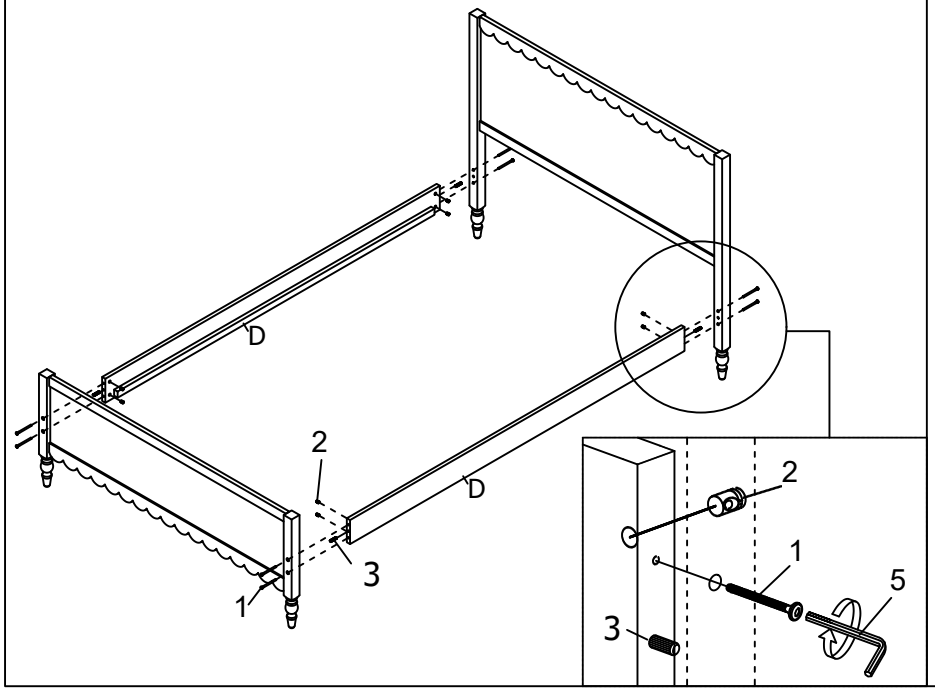

STEP 3

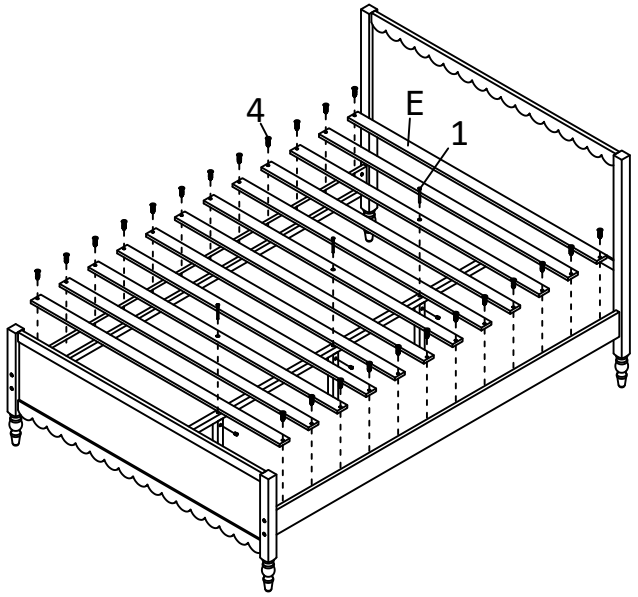

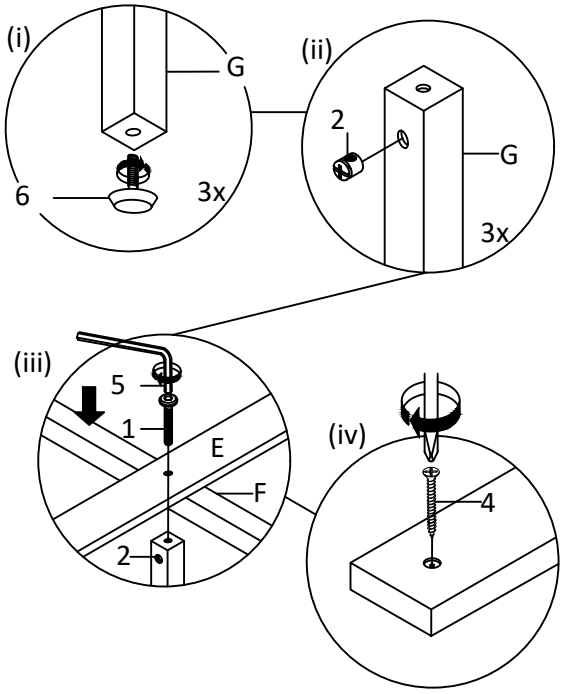

RONI DRESSER

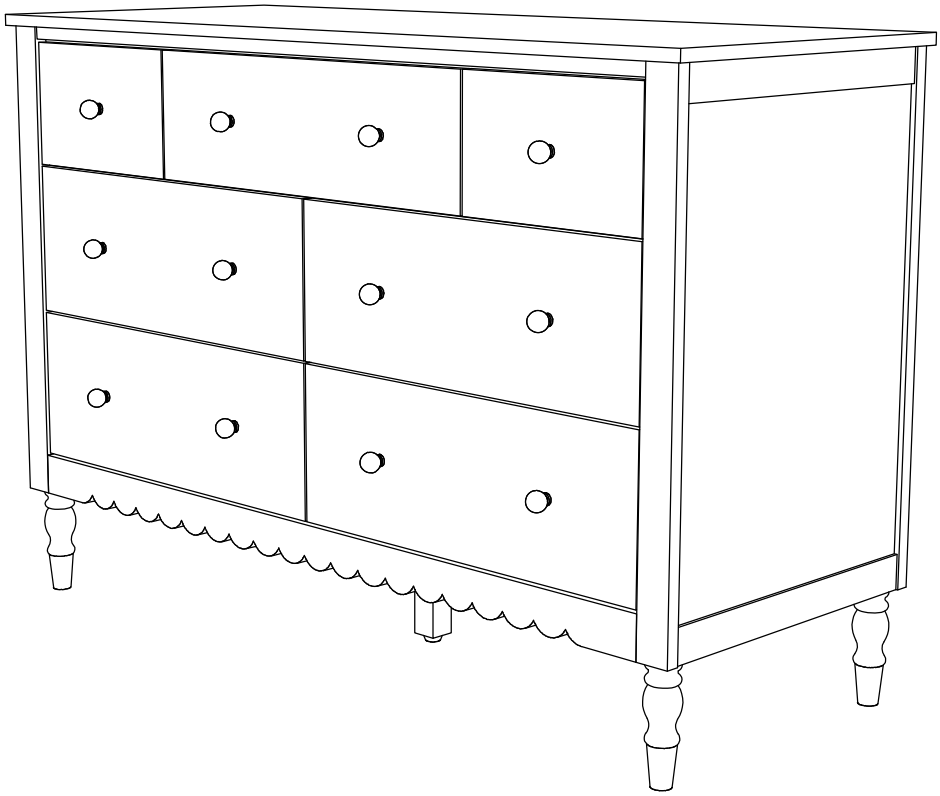

ASSEMBLY TIPS

1. Remove hardware from box and sort by size.
2. Please ensure that all hardware and parts are presented prior start of assembly.
3. Please follow attached instruction in the same sequence as numbered to assure fast and easy assembly.

WARNING !

1. Don't attempt to repair or modify part that are broken or defective. Please contact with the store immediately.
2. This product is for home use only and not intended for commercial establishment.

NO	HARDWARE LIST	QTY	NO	HARDWARE LIST	QTY
1	JCBC/W M6 x 30mm 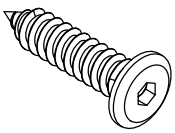	6 PCS	8	CSK M4 x 25mm 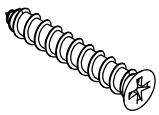	72 PCS
2	MINIFIX 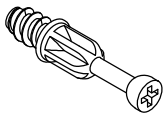	23 PCS	9	THMS M4 x 20mm 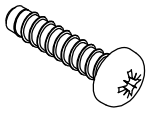	12 PCS
3	HOUSING 12mm	23 PCS	10	L-BRACKET 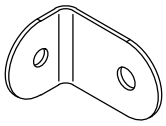	4 PCS
4	W/DOWEL M6 x 30mm 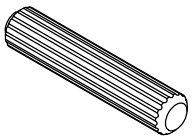	12 PCS	11	HANDLE(GOLD) 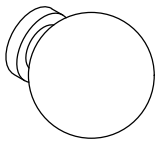	12 PCS
5	W/DOWEL M8 x 30mm 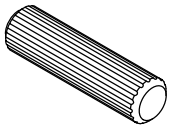	4 PCS	12	ALLEN KEY M4 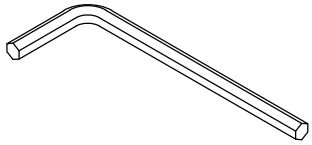	1 PCS
6	CSK M3.5 x 12mm	8 PCS	13	BASE GLIDE 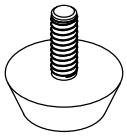	1 PCS
7	CSK M4 x 20mm 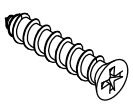	4 PCS			

PART LIST

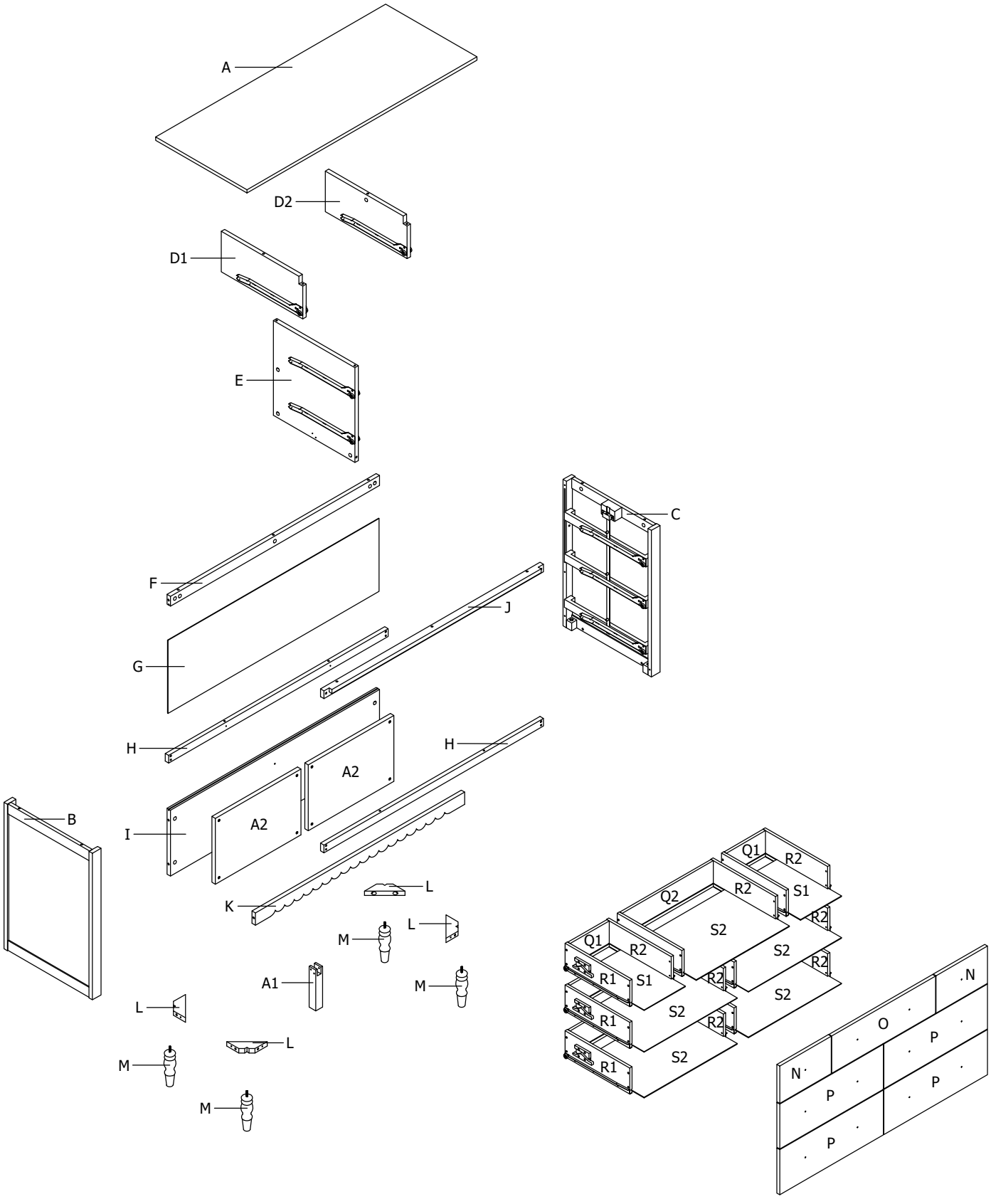
A
D2
D1
E
C
F
J
G
H
H
A2
A2
B
I
K
L
L
M
M
A1
L
L
M
M
Q1
R2
Q2
R2
S1
R2
S2
Q1
R2
S2
R2
R1
S1
R2
S2
S2
R1
R2
S2
R1
N
O
P
N
P
P
P

ASSEMBLY INSTRUCTION

STEP 1

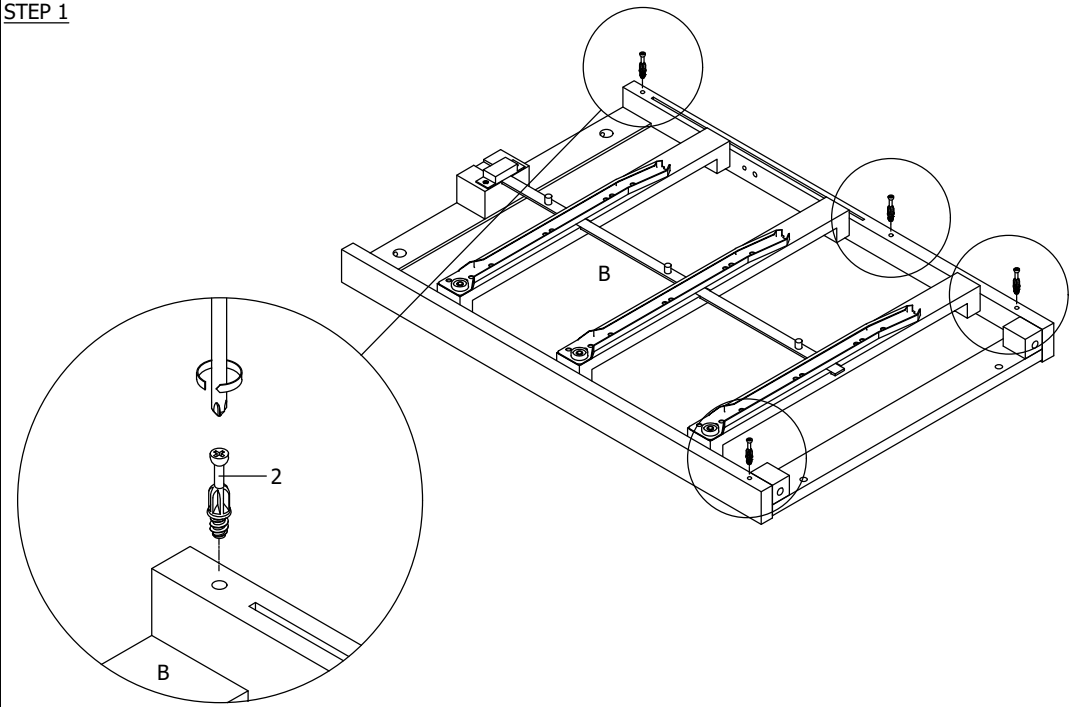

STEP 2

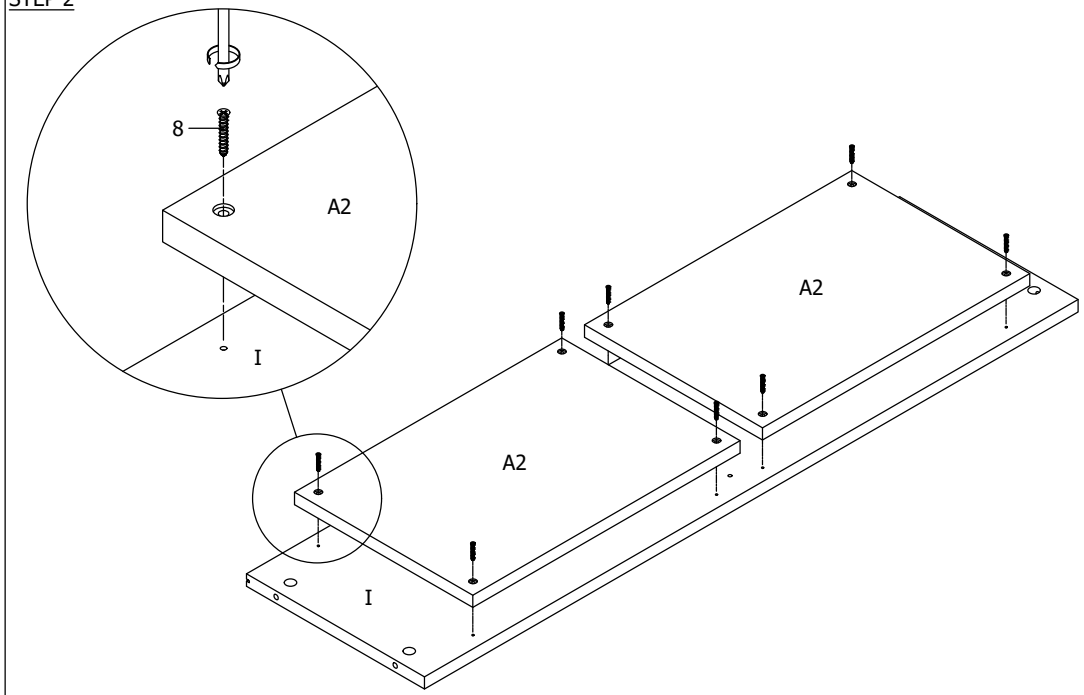

STEP 3

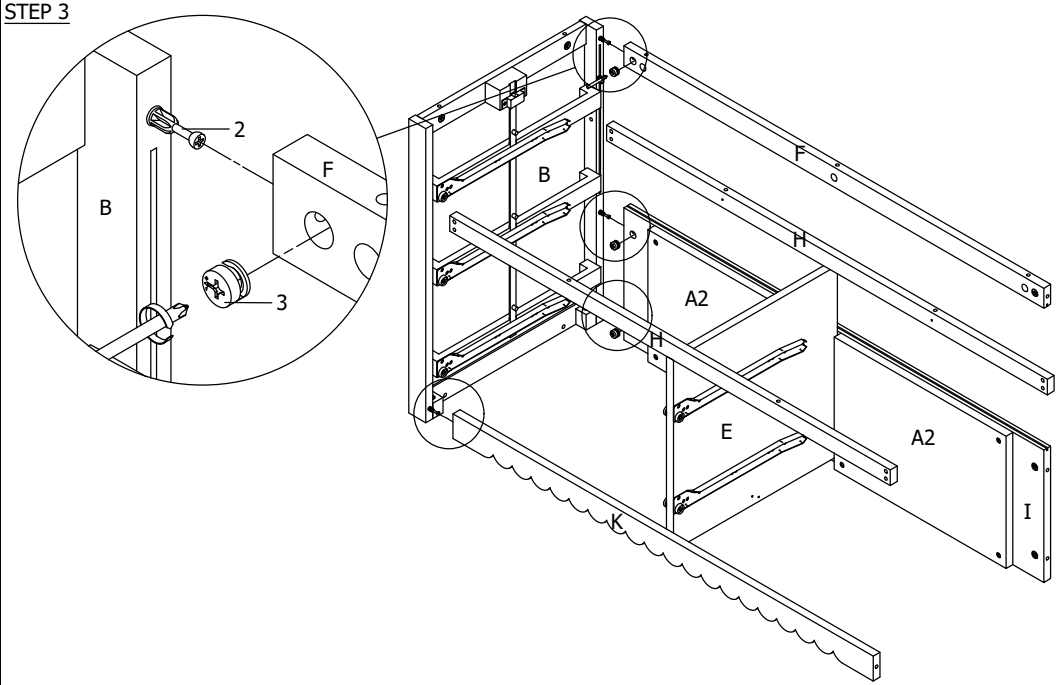

STEP 4

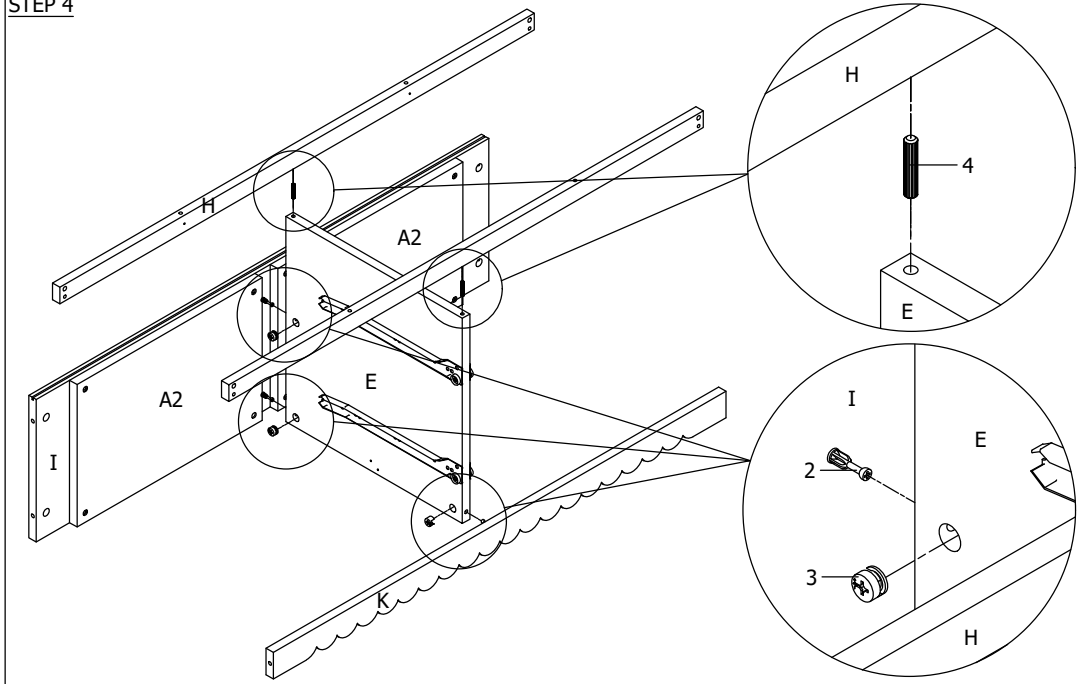

ASSEMBLY INSTRUCTION

STEP 5

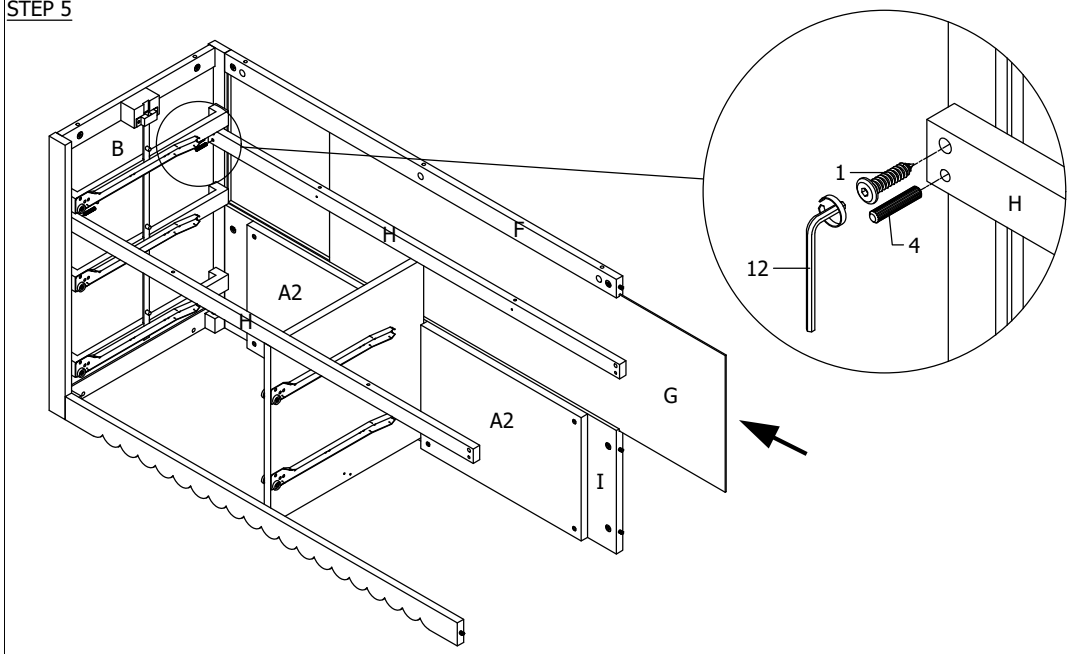

STEP 6

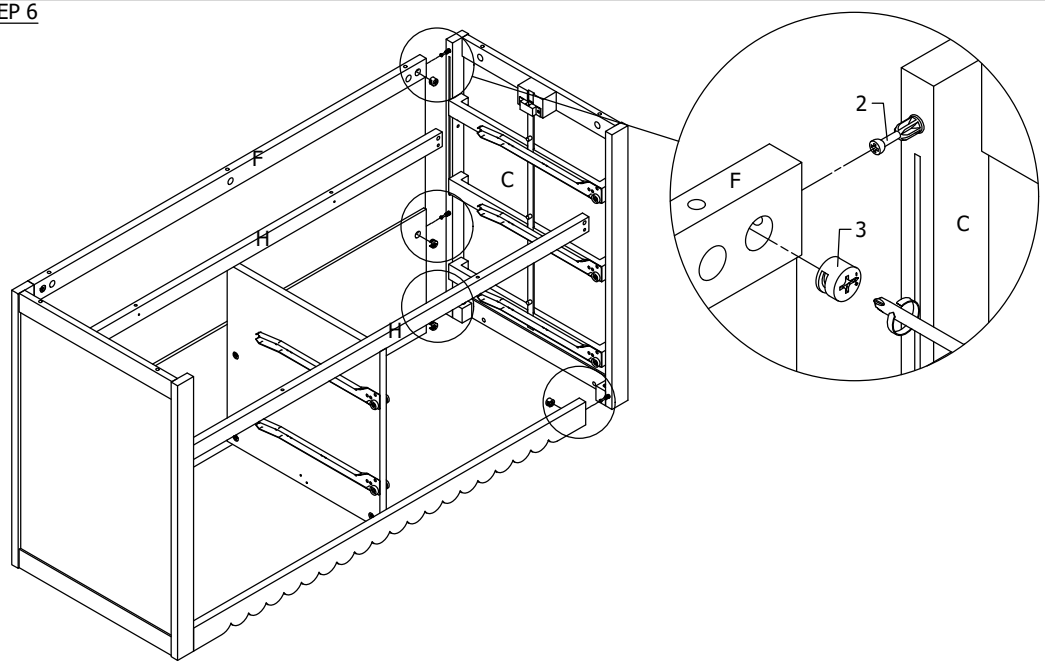

STEP 7

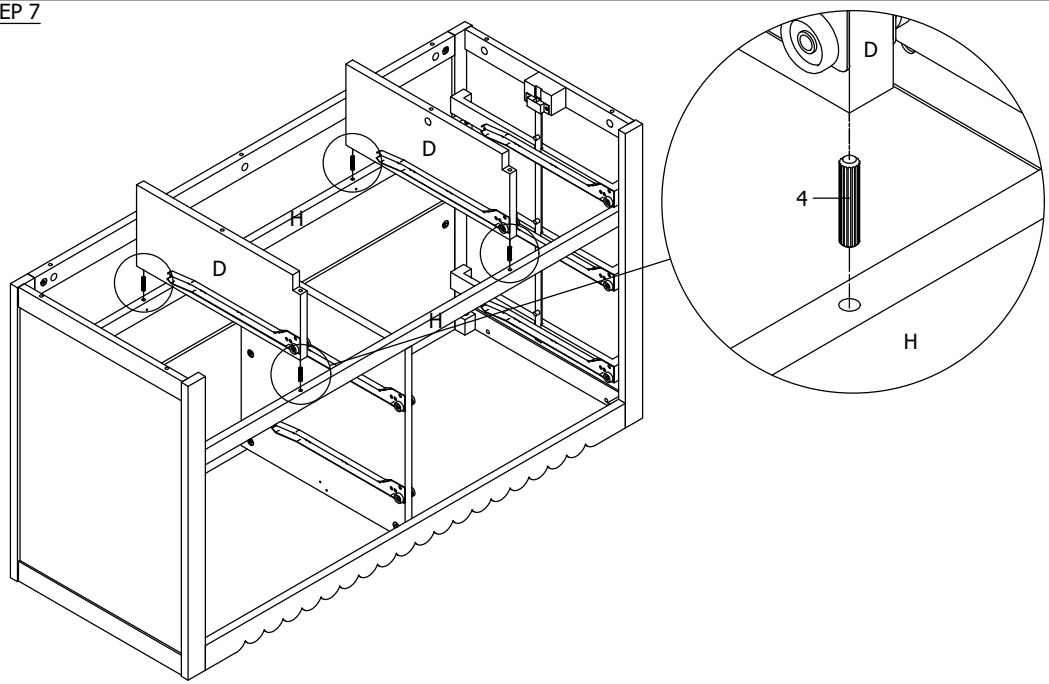

STEP 8

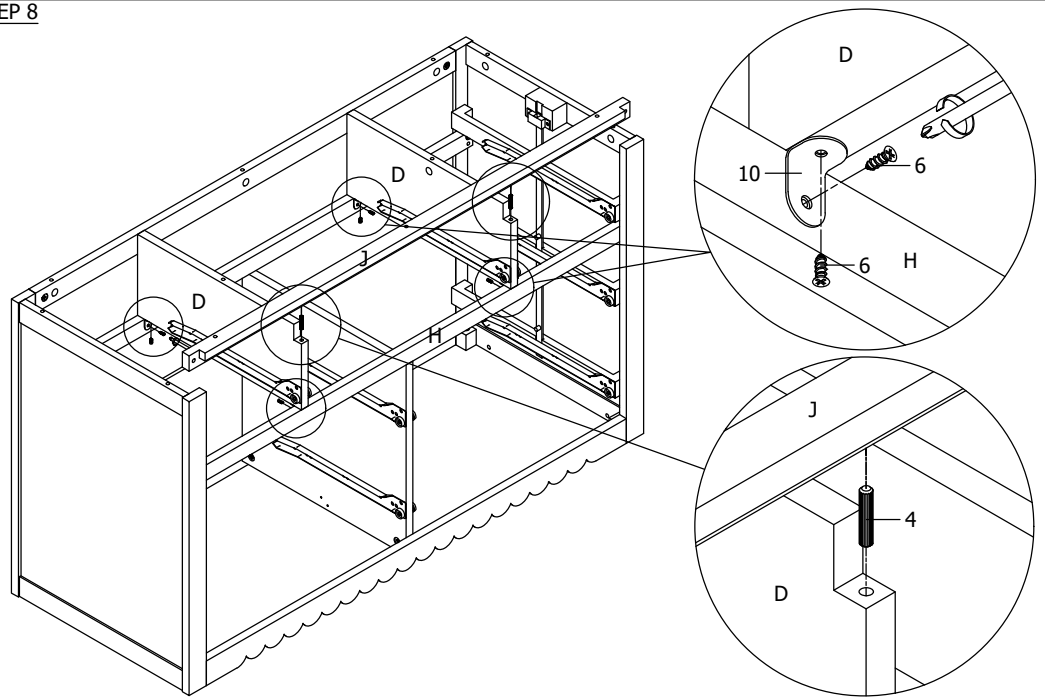

ASSEMBLY INSTRUCTION

STEP 9

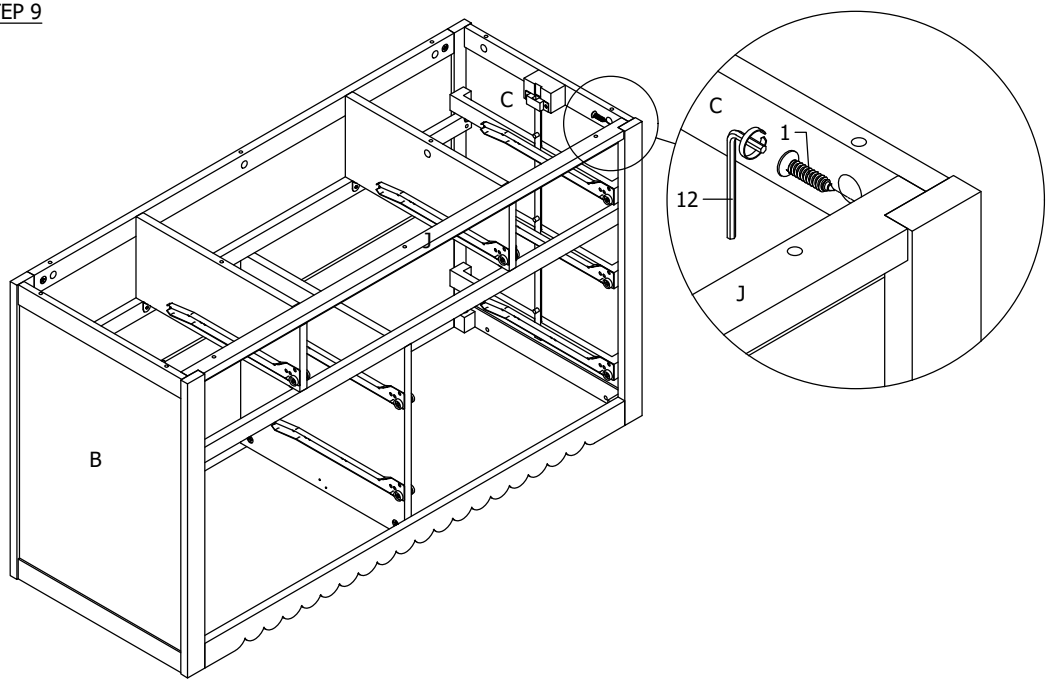

STEP 10

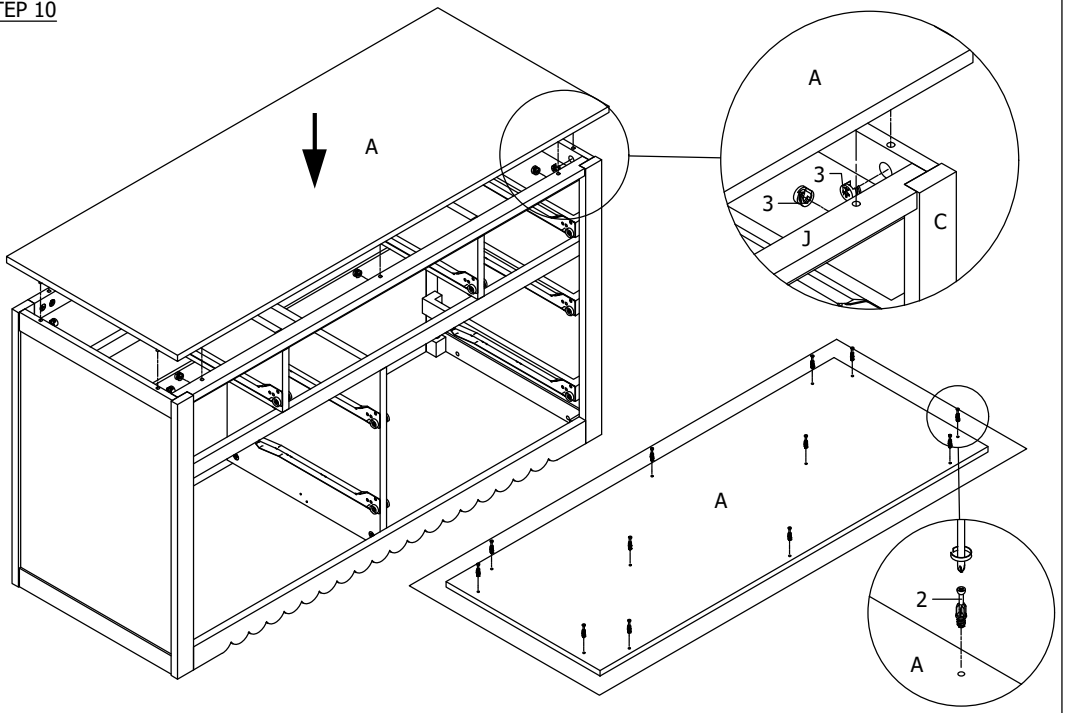

STEP 11

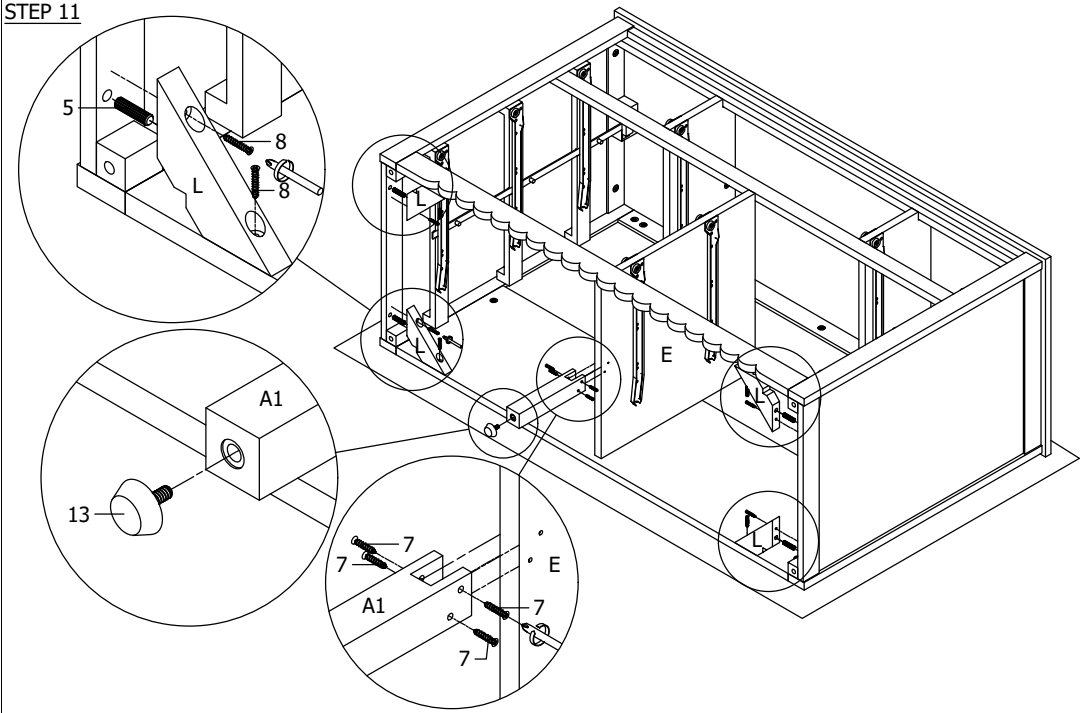

STEP 12

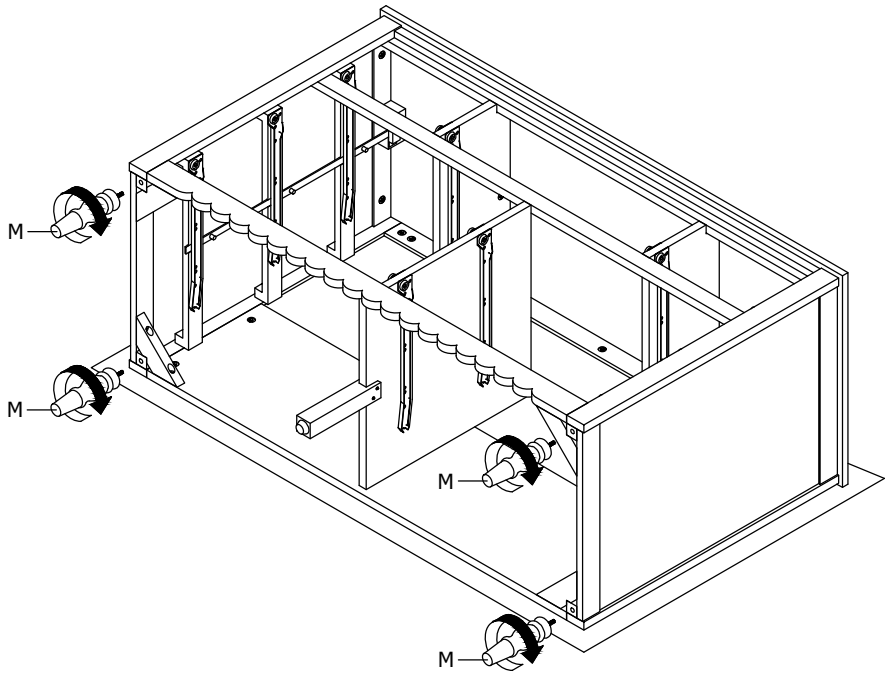

ASSEMBLY INSTRUCTION

STEP 13

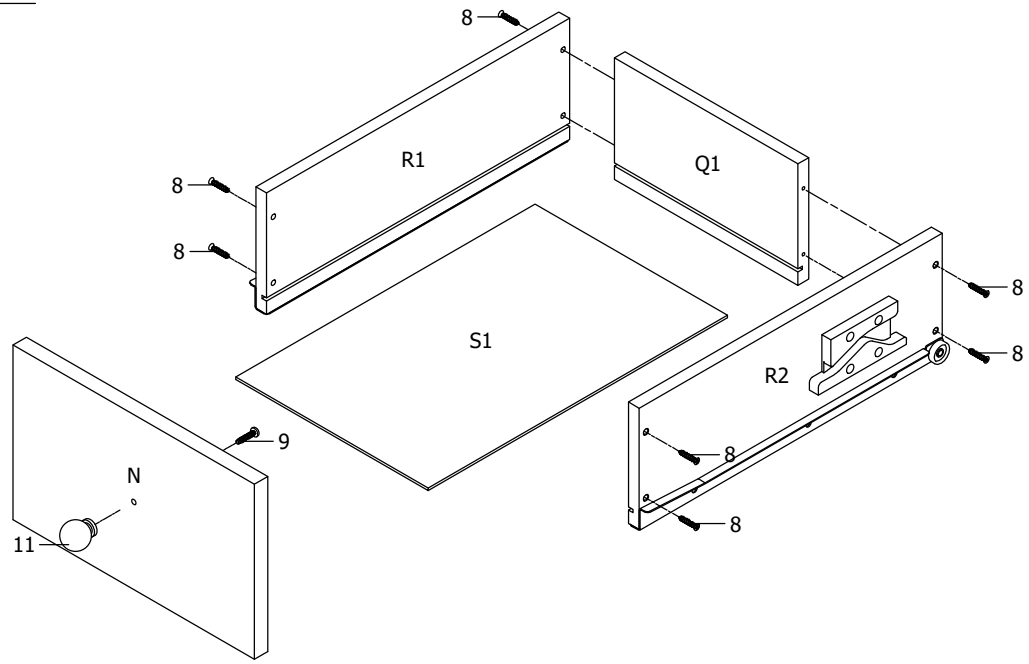

STEP 14

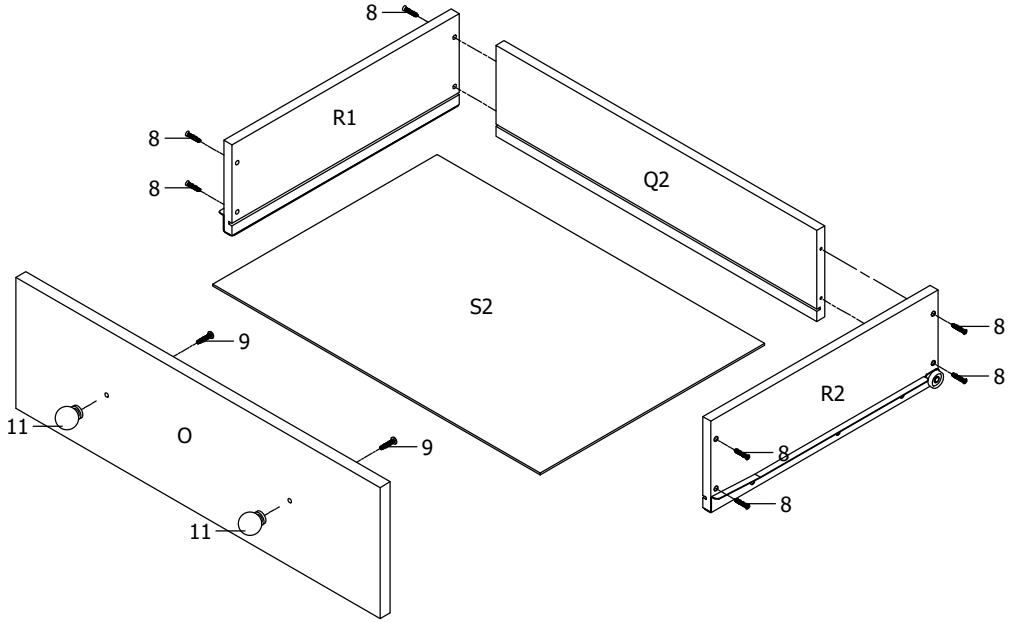

STEP 15

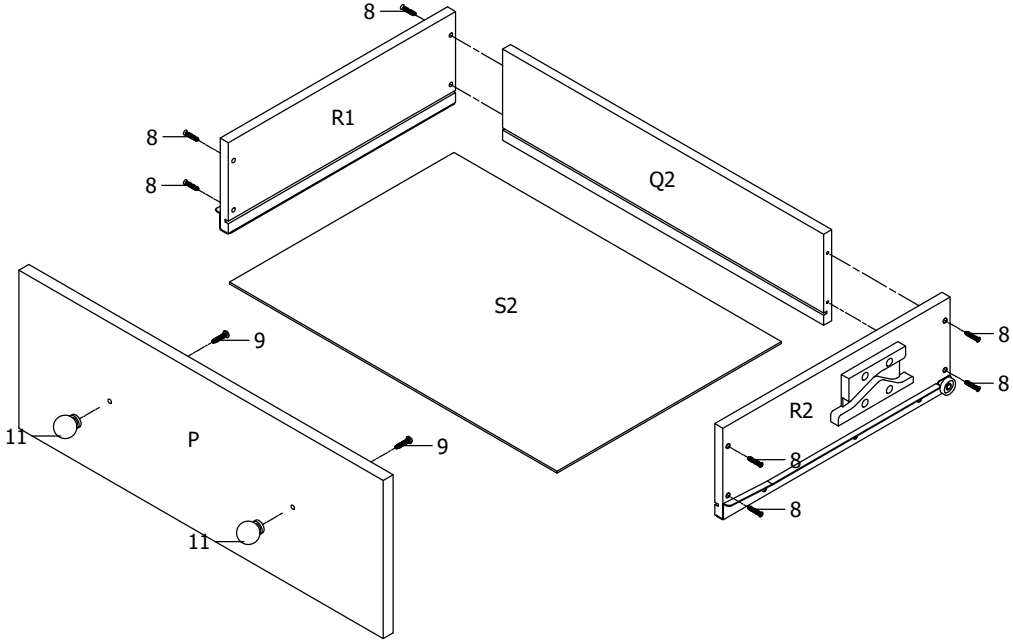

STEP 16 (ASSEMBLY COMPLETE)

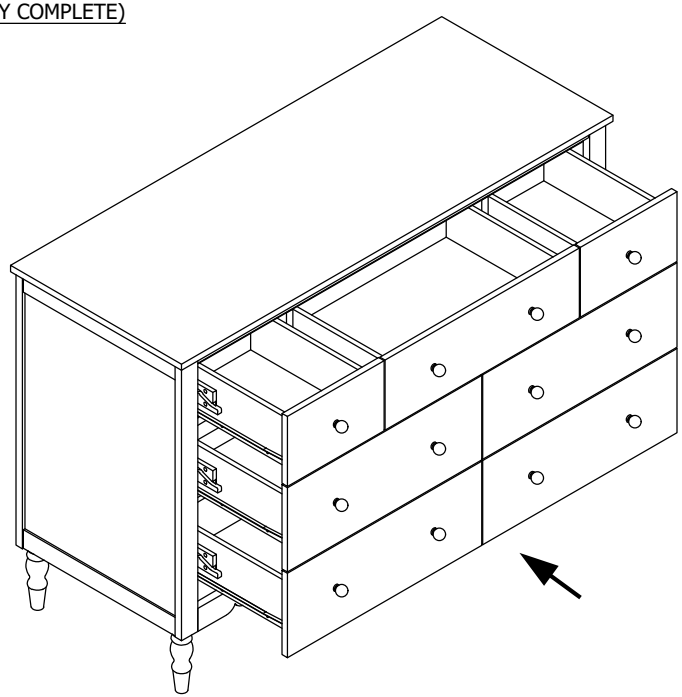

ATTENTION : To prevent tip over, product must be attached to wall using the anti-tipping devices provided as shown below.

- Anti-tipping device packets can be found in first Drawer.

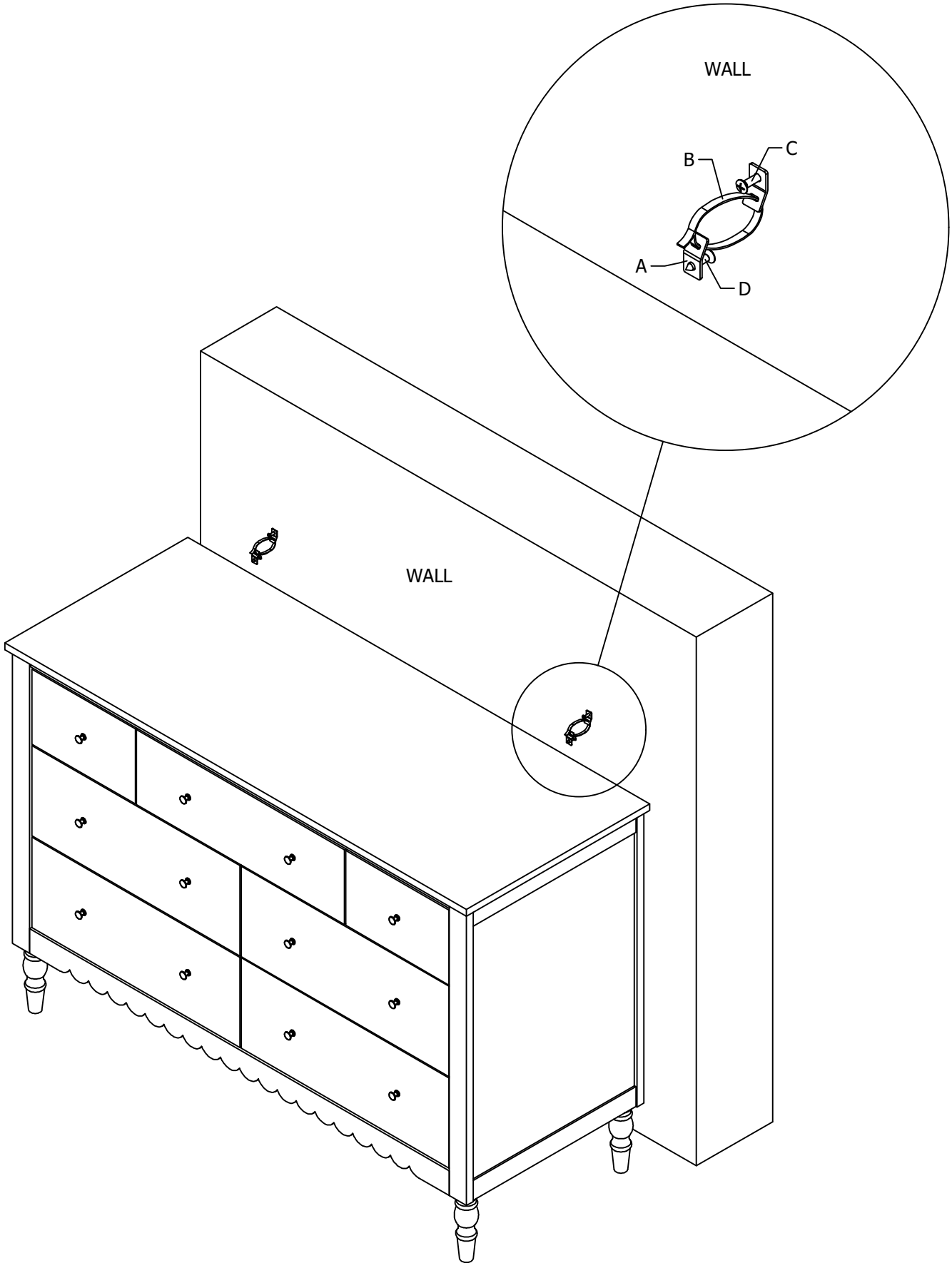

HARDWARE

A
(4 PCS)

B
(2 PCS)

C
(2 PCS)

D
(2 PCS)

RONI CHEST

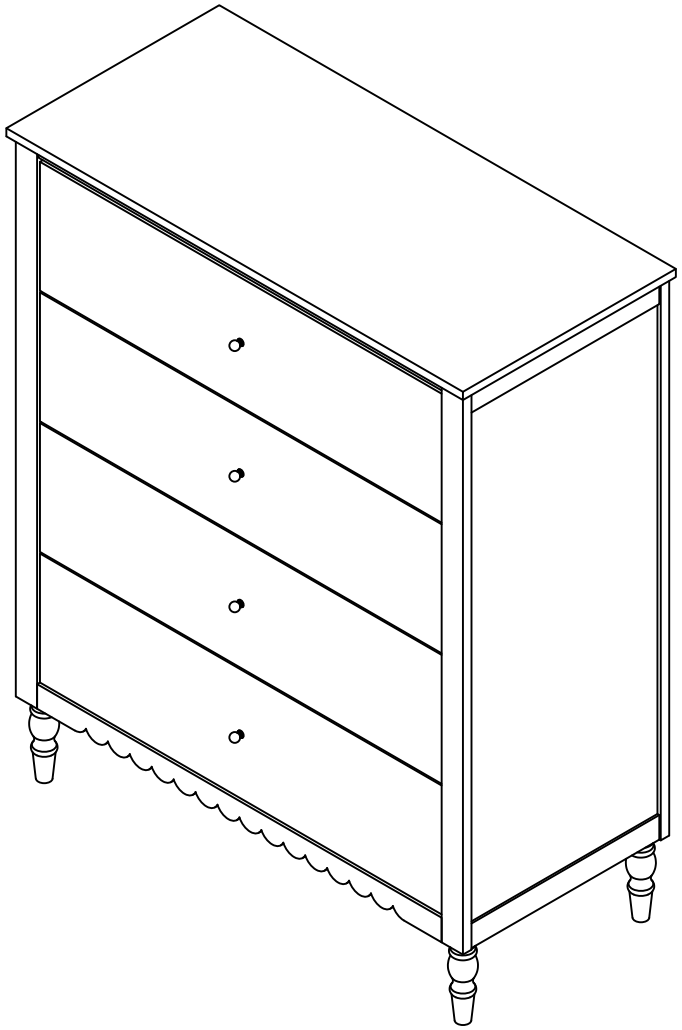

ASSEMBLY TIPS

1. Remove hardware from box and sort by size.
2. Please ensure that all hardware and parts are presented prior start of assembly.
3. Please follow attached instruction in the same sequence as numbered to assure fast and easy assembly

WARNING !

1. Don't attempt to repair or modify part that are broken or defective. Please contact with the store immediately.
2. This product is for home use only and not intended for commercial establishment.

NO	HARDWARE LIST	QTY	NO	HARDWARE LIST	QTY
1	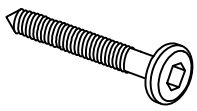 JCBC/W M6 x 30mm	8 PCS	6	CSK M4 x 25mm	48 PCS
2	MINIFIX BOLT	18 PCS	7	CSK M4 x 50mm	6 PCS
3	MINIFIX CAM	18 PCS	8	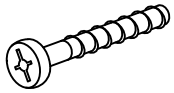 THS M4 X 20	4 PCS
4	WOODEN DOWEL M6 X 30	24 PCS	9	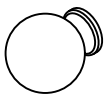 HANDLE	4 PCS
5	WOODEN DOWER M8 X 30	6 PCS	10	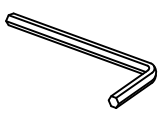 ALLEN KEY M4	1 PCS

PART LIST

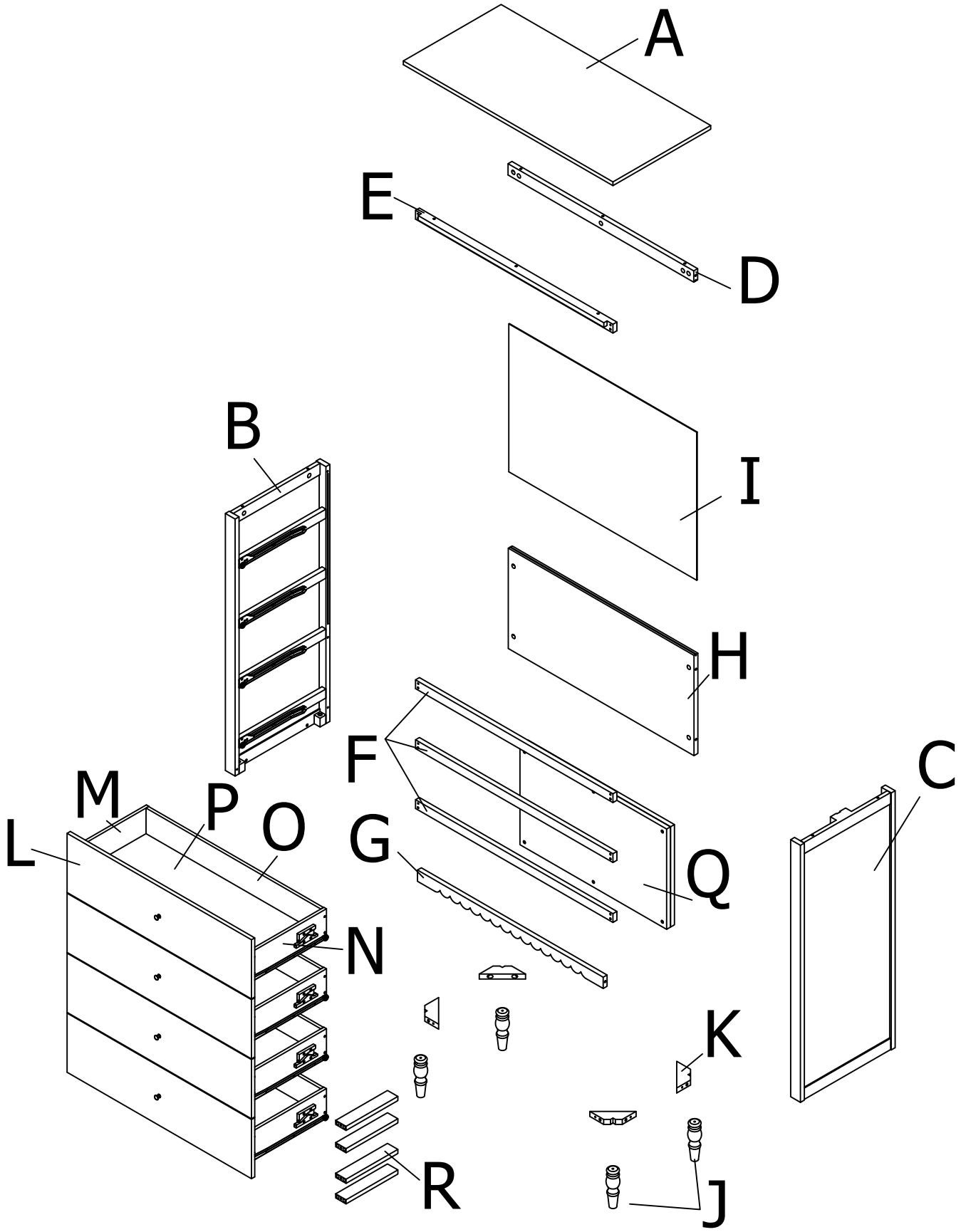

ASSEMBLY INSTRUCTIONS

STEP 1

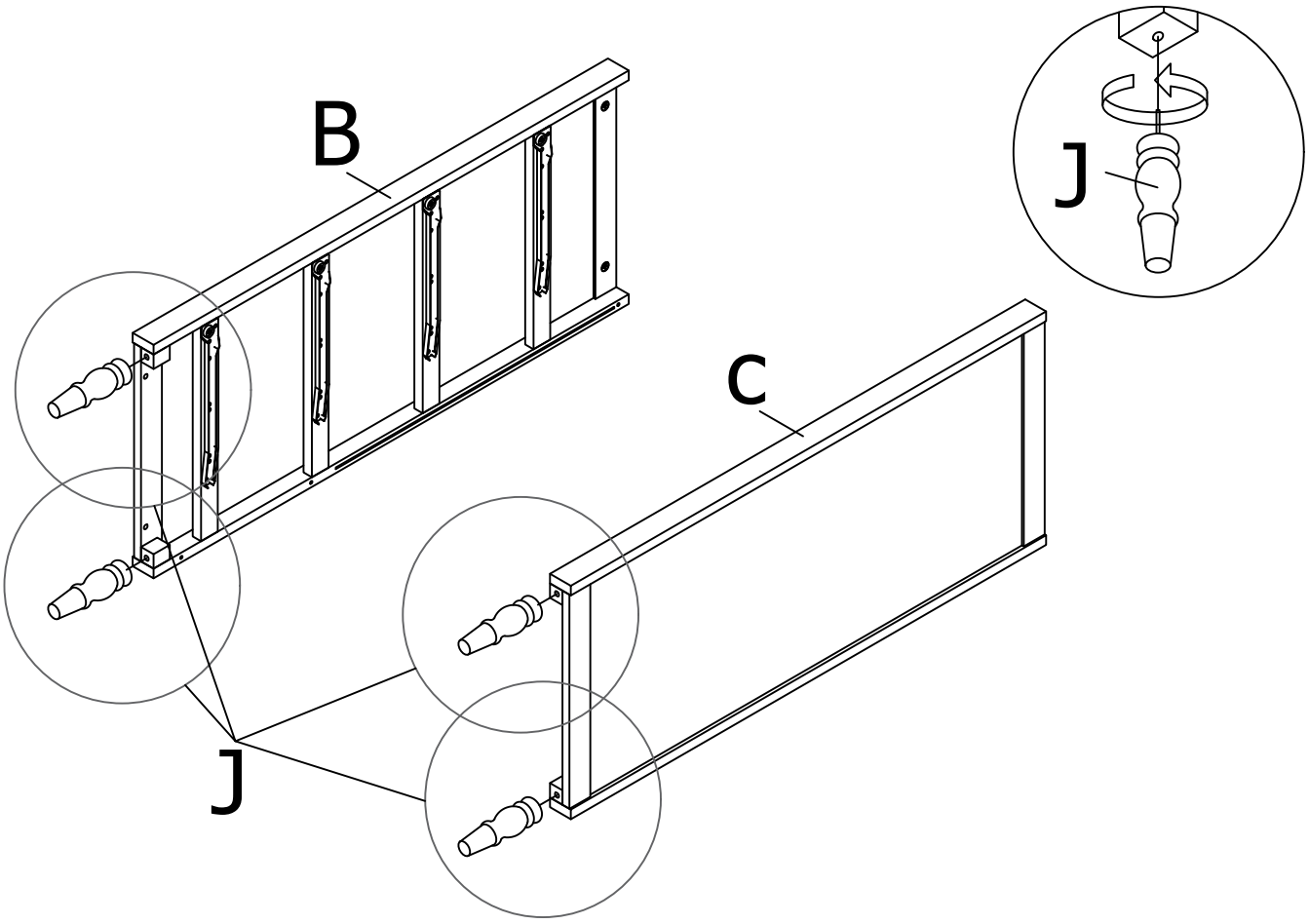

STEP 2

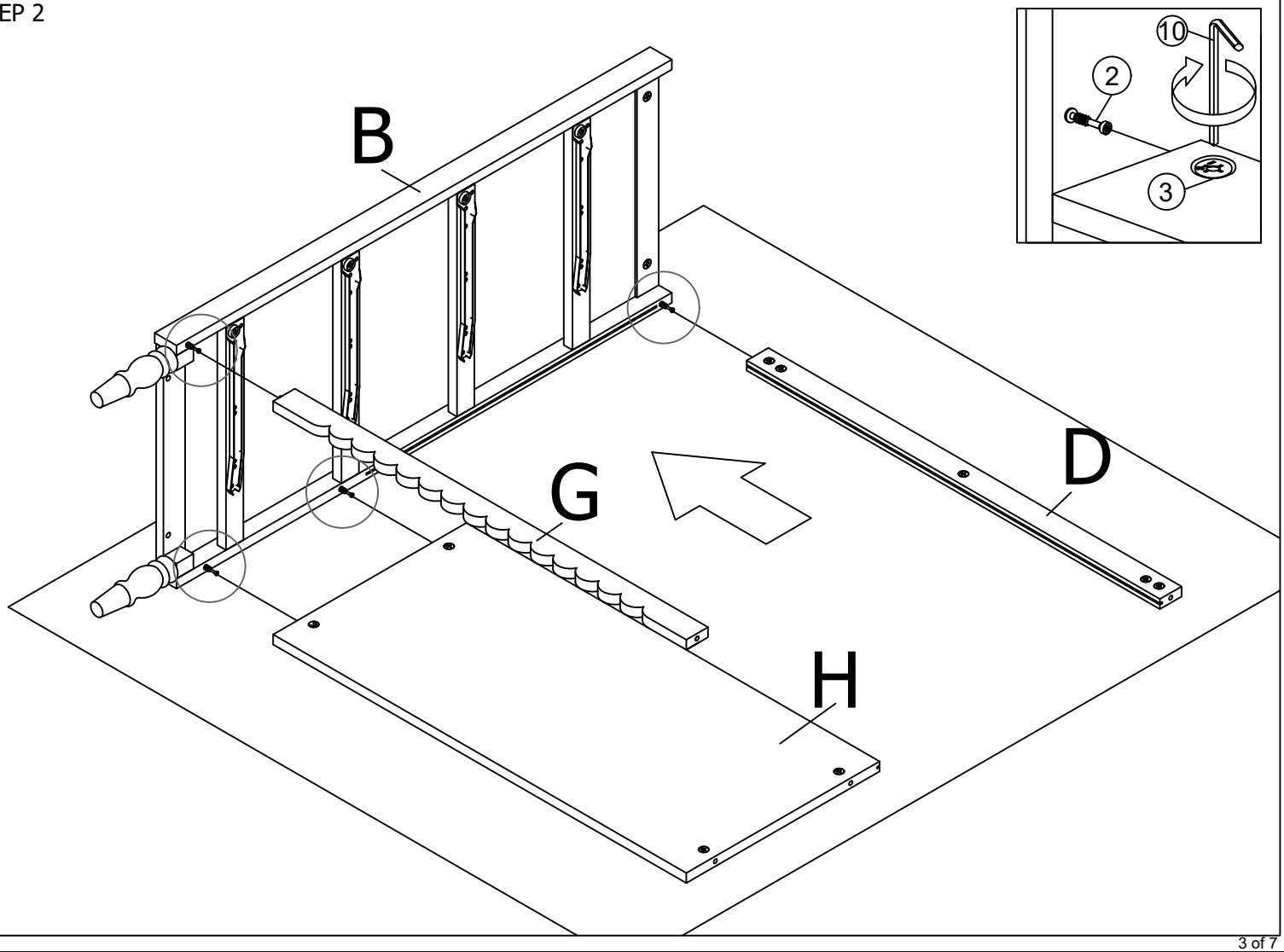

ASSEMBLY INSTRUCTIONS

STEP 3

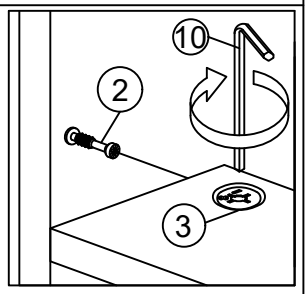

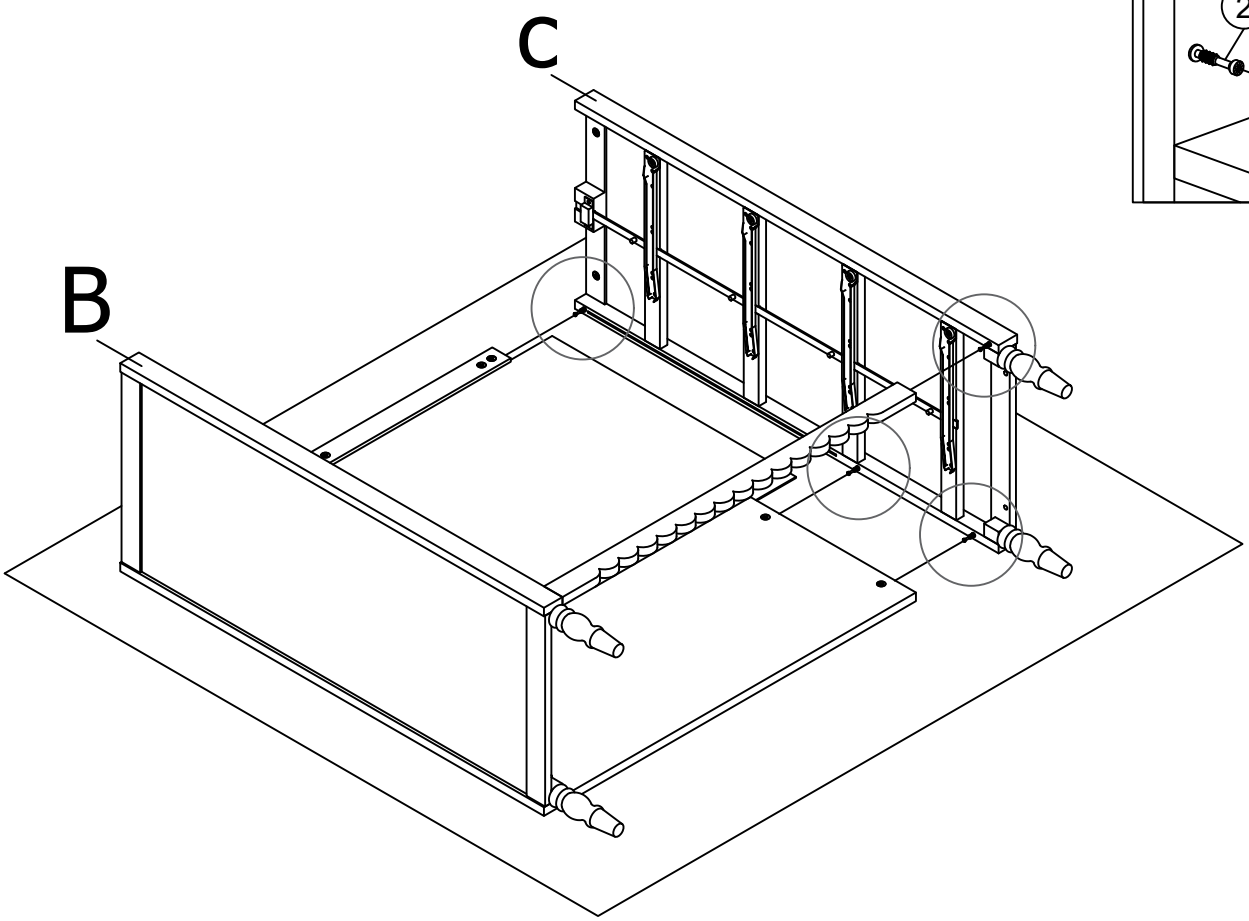

STEP 4

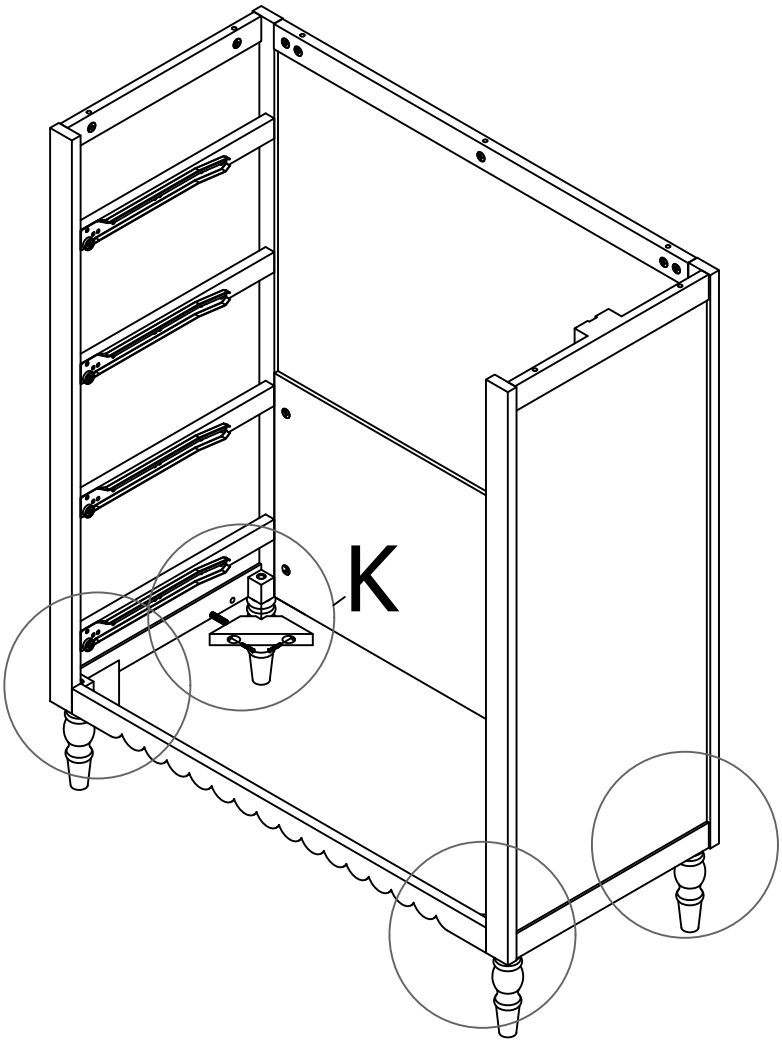

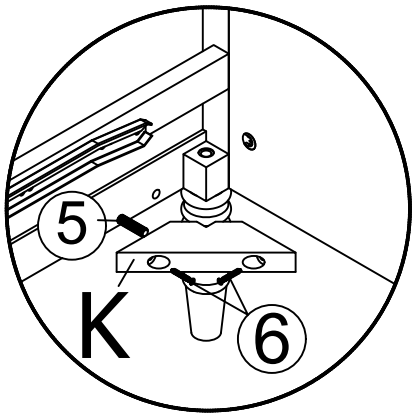

ASSEMBLY INSTRUCTIONS

STEP 5

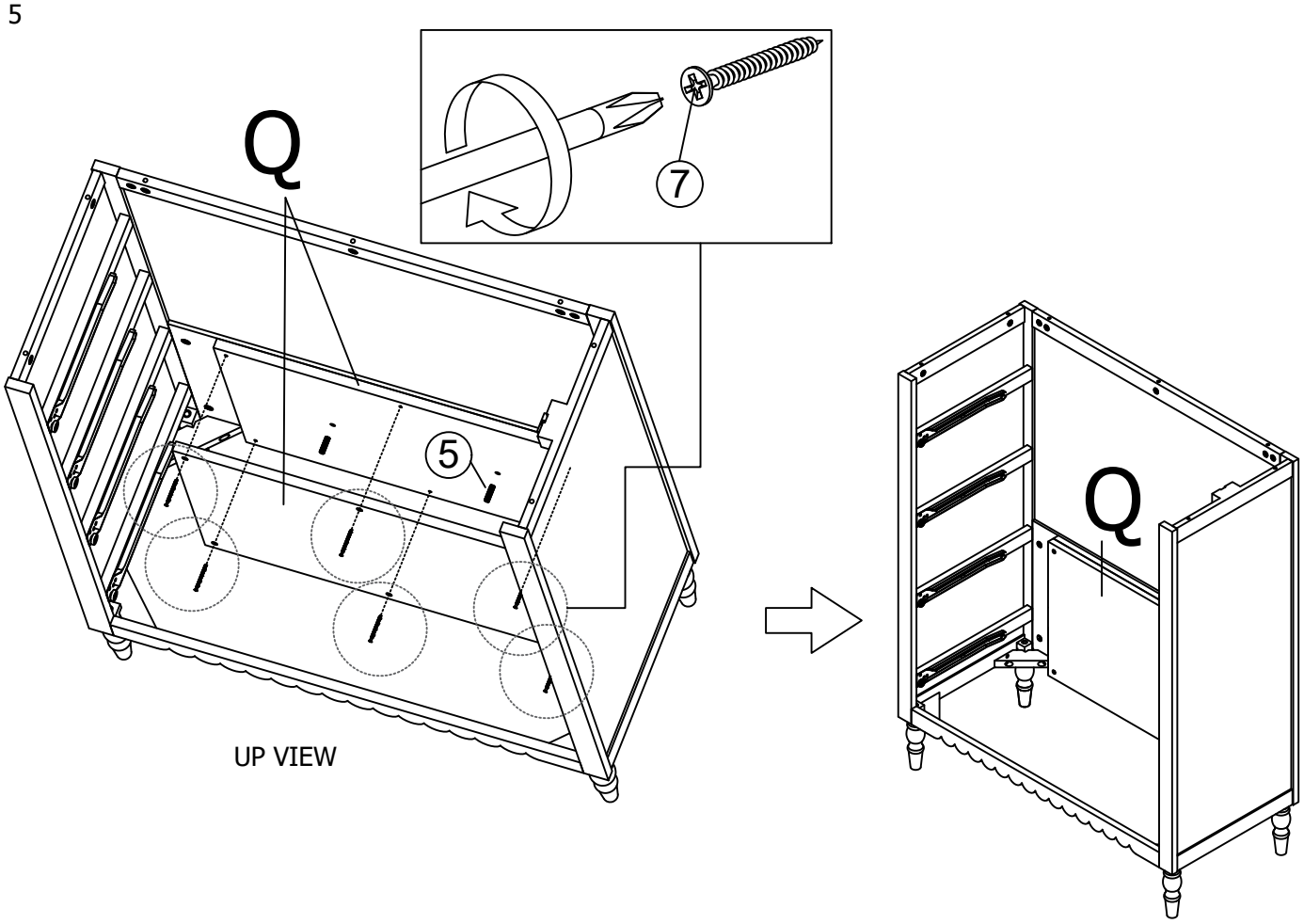

UP VIEW

STEP 6

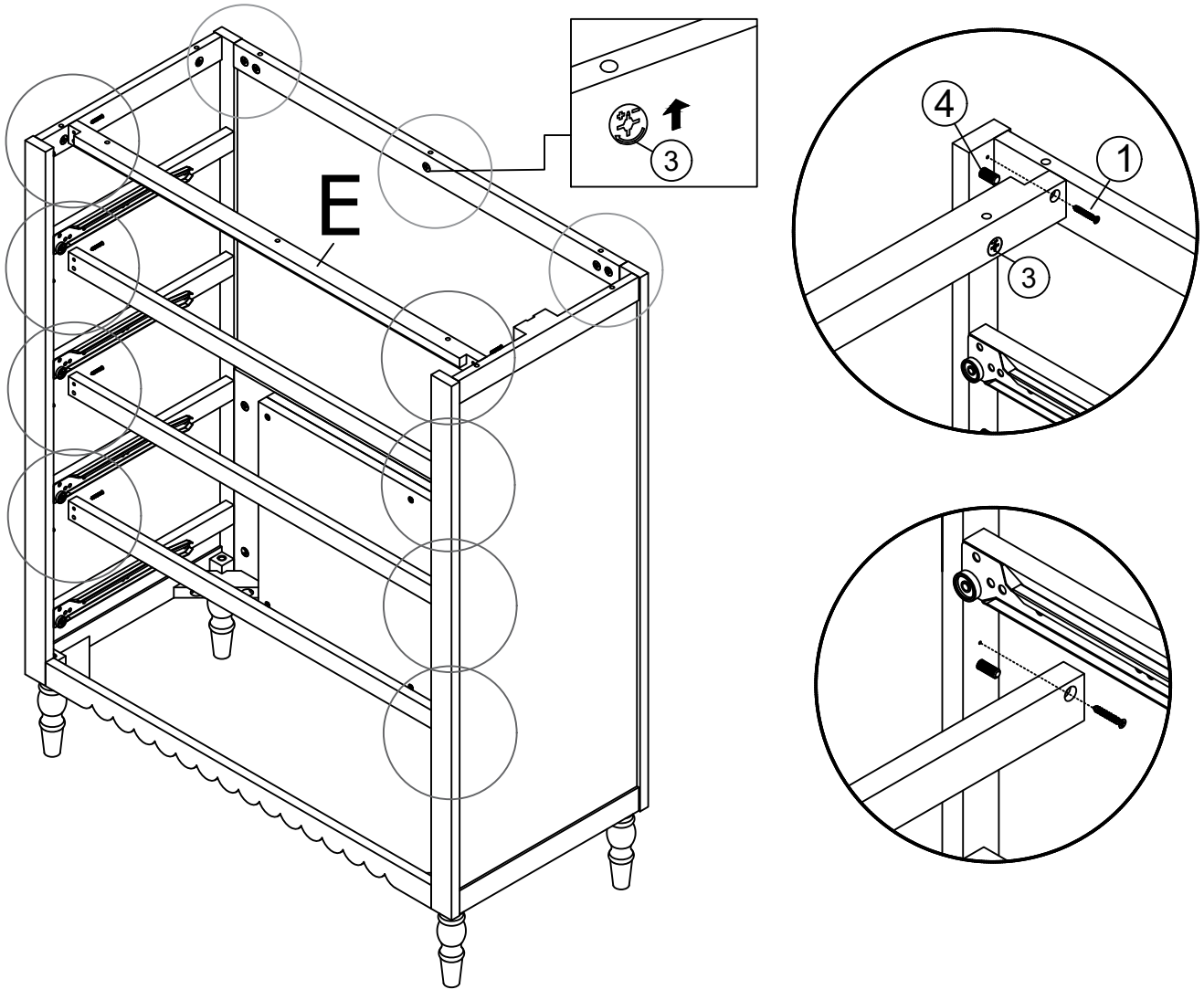

ASSEMBLY INSTRUCTIONS

STEP 7

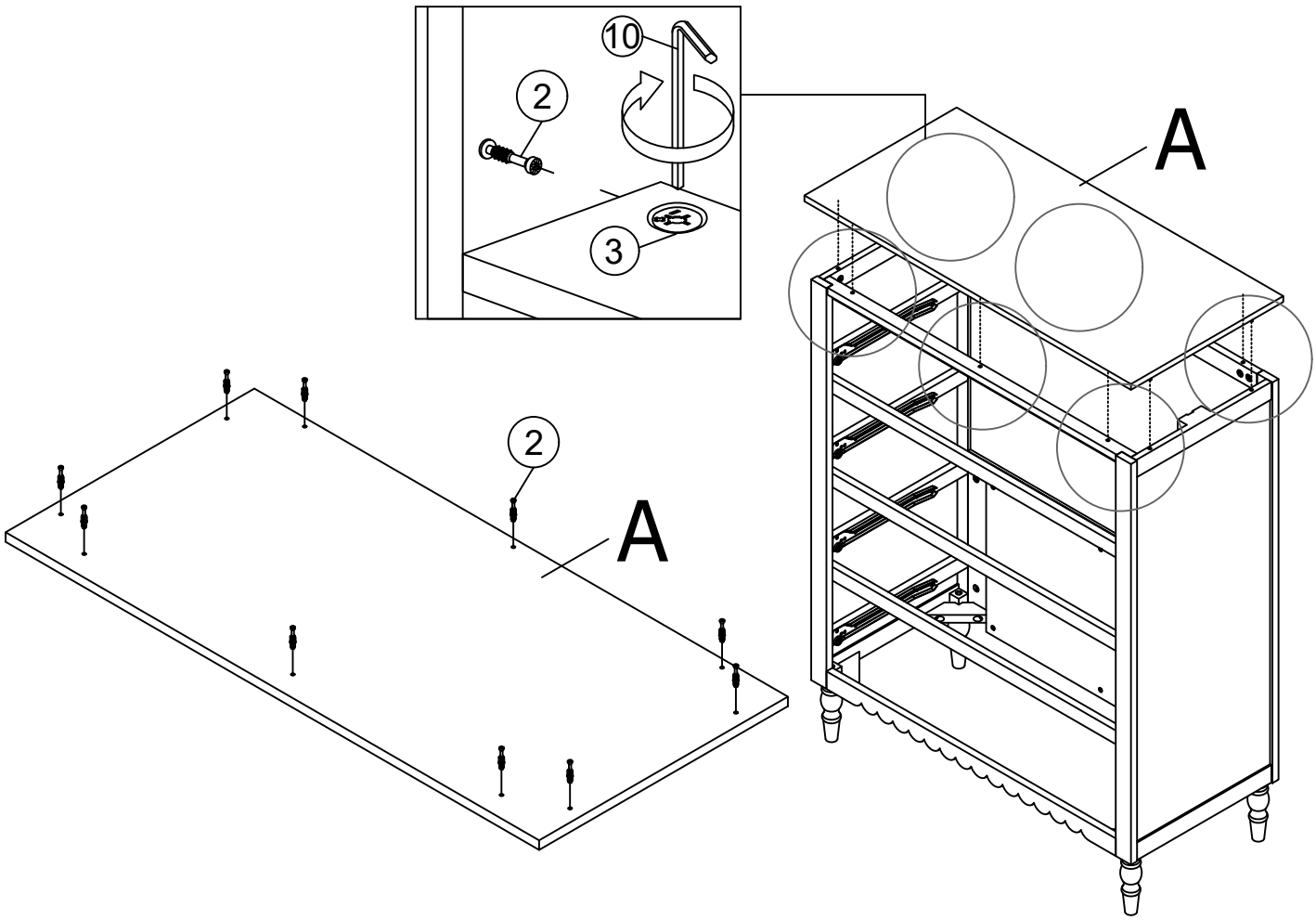

STEP 8

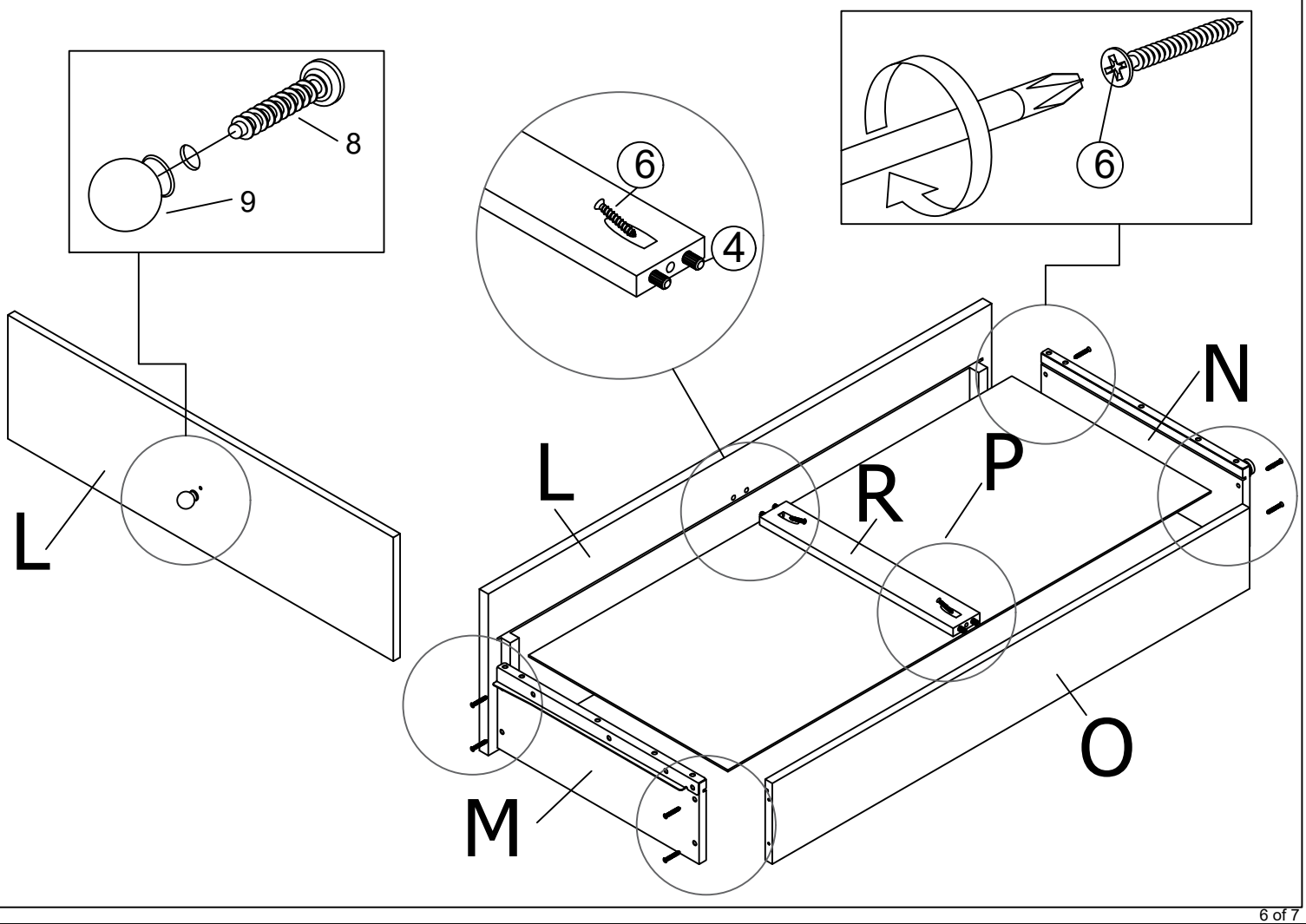

ASSEMBLY INSTRUCTIONS

STEP 9

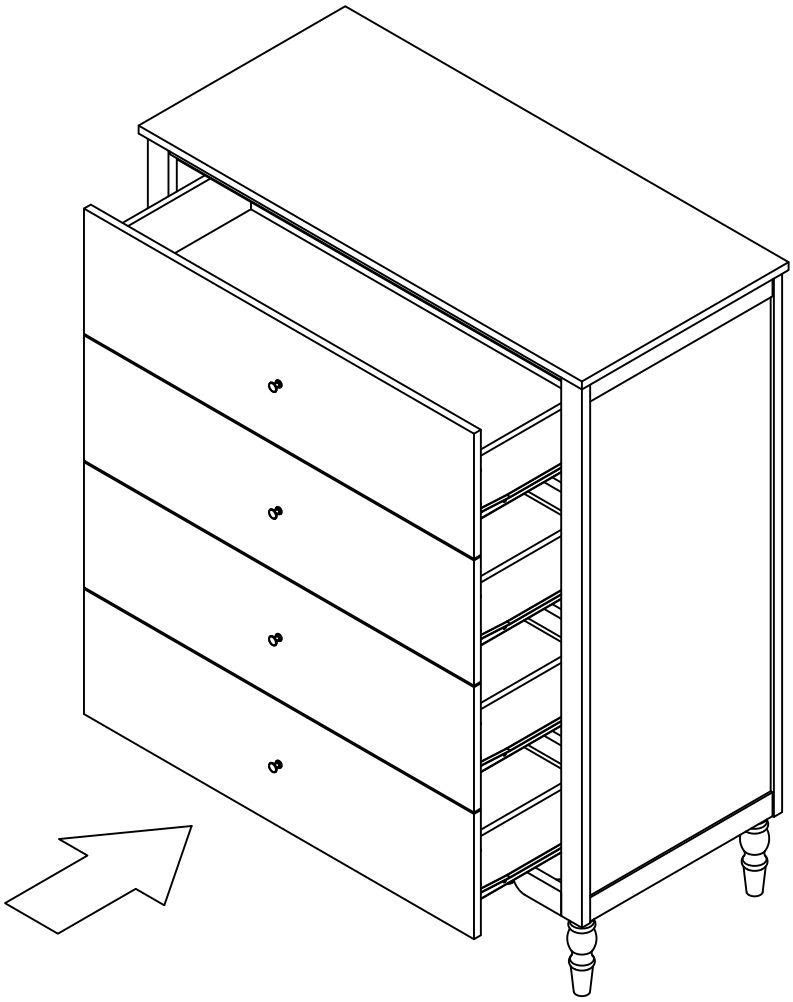

COMPLETED

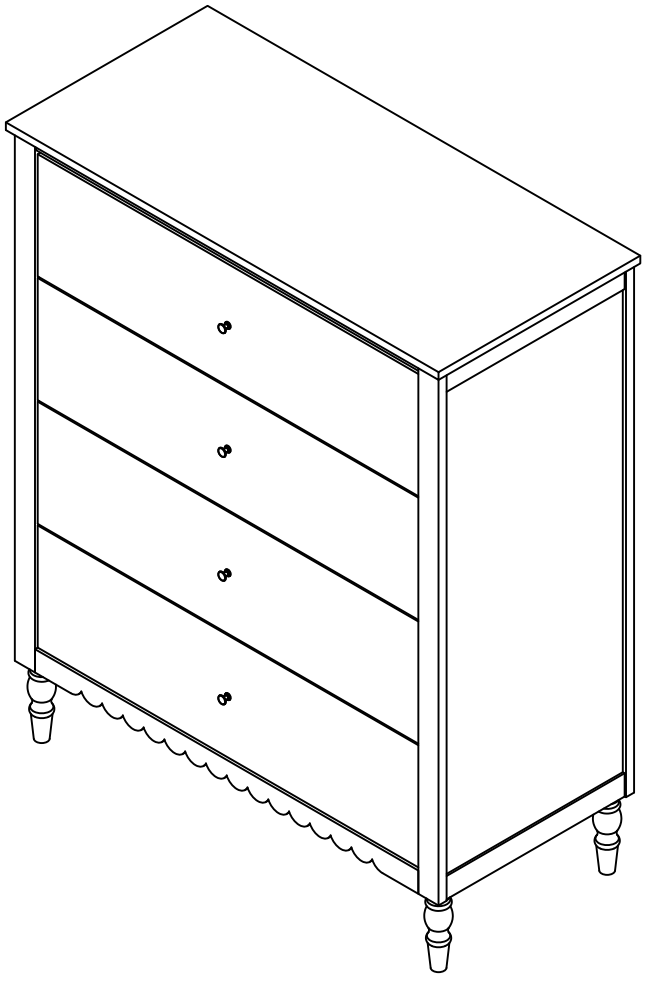

ATTENTION : To prevent tip over, product must be attached to wall using the anti-tipping devices provided as shown below.

- Anti-tipping device packets can be found in first Drawer.

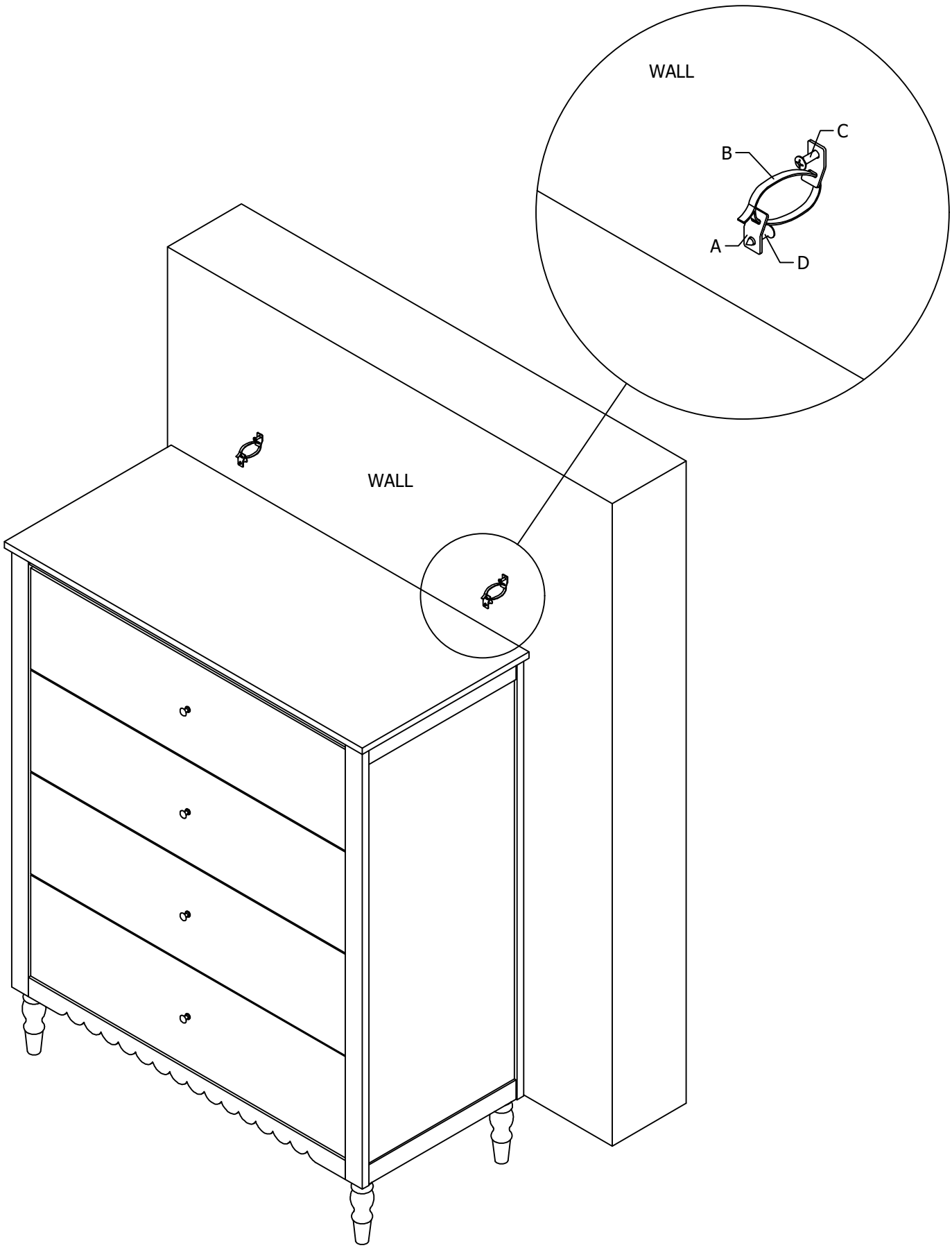

HARDWARE

A
(4 PCS)

B
(2 PCS)

C
(2 PCS)

D
(2 PCS)

RONI NIGHTSTAND

ASSEMBLY TIPS

1. Remove hardware from box and sort by size.
2. Please ensure that all hardware and parts are presented prior start of assembly.
3. Please follow attached instruction in the same sequence as numbered to assure fast and easy assembly.

WARNING !

1. Don't attempt to repair or modify part that are broken or defective. Please contact with the store immediately.
2. This product is for home use only and not intended for commercial establishment.

NO	HARDWARE LIST	QTY	NO	HARDWARE LIST	QTY
1	MINIFIX 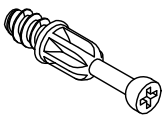	6 PCS	5	CSK M4 x 20mm 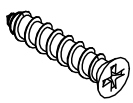	8 PCS
2	HOUSING 10mm 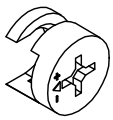	6 PCS	6	CSK M4 x 25mm 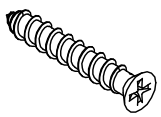	12 PCS
3	W/DOWEL M8 x 30mm 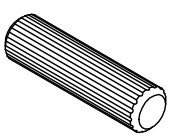	6 PCS	7	HANDLE(GOLD) 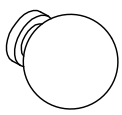	1 PCS
4	THMS M4 x 20mm 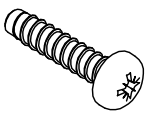	1 PCS			

PART LIST

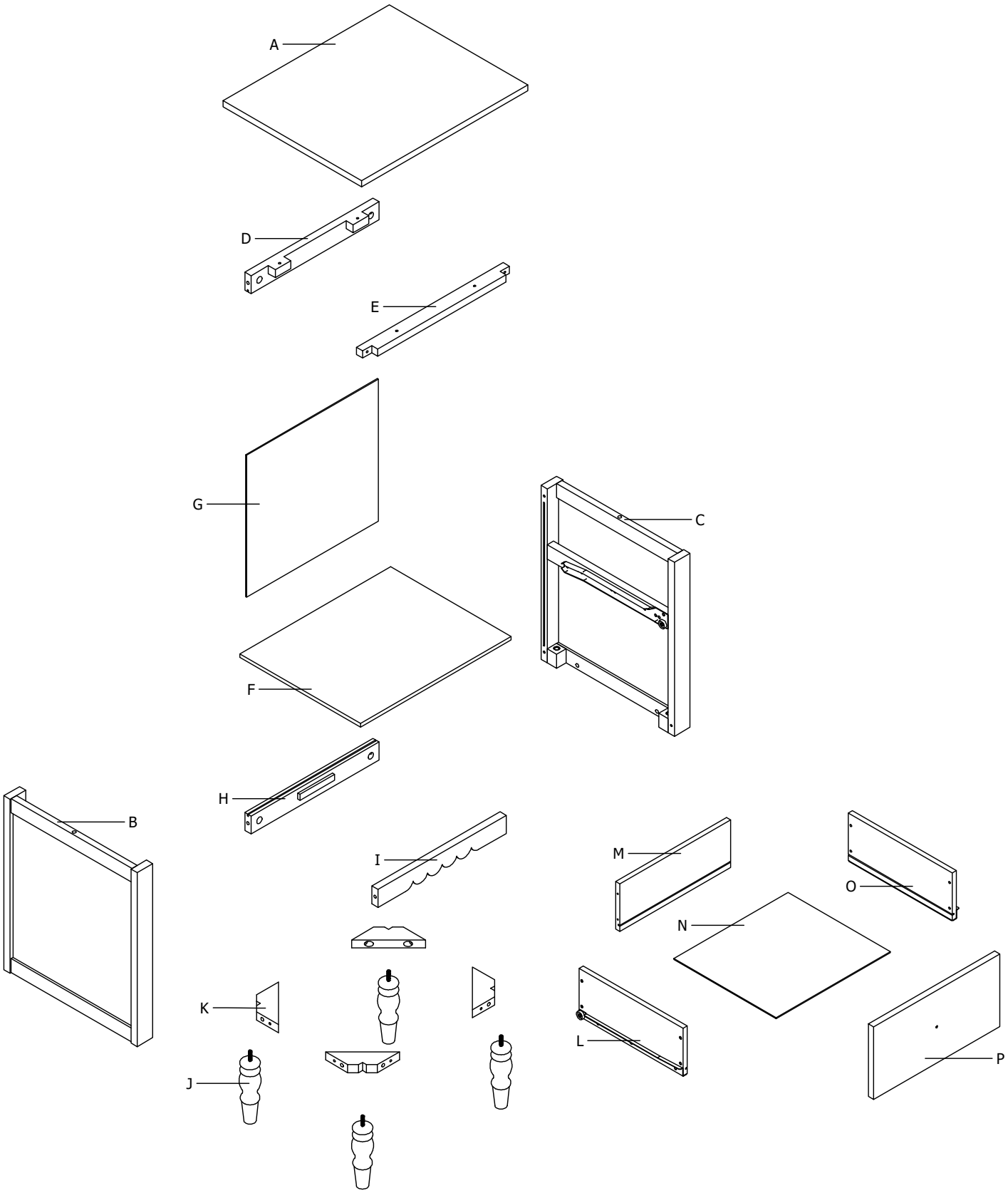

ASSEMBLY INSTRUCTION

STEP 1

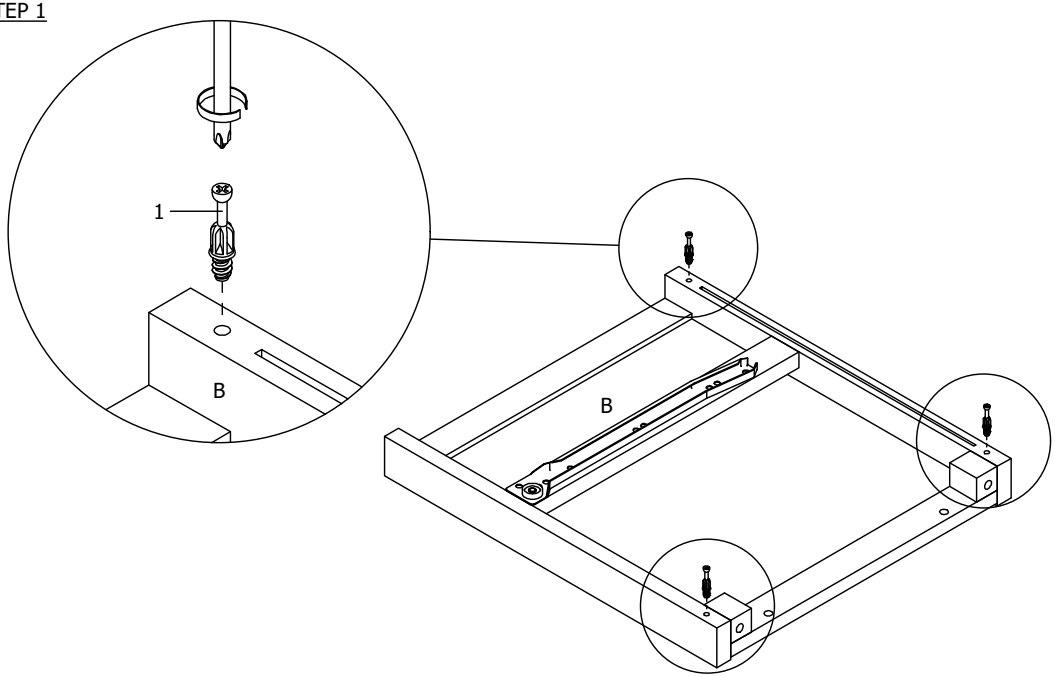

STEP 2

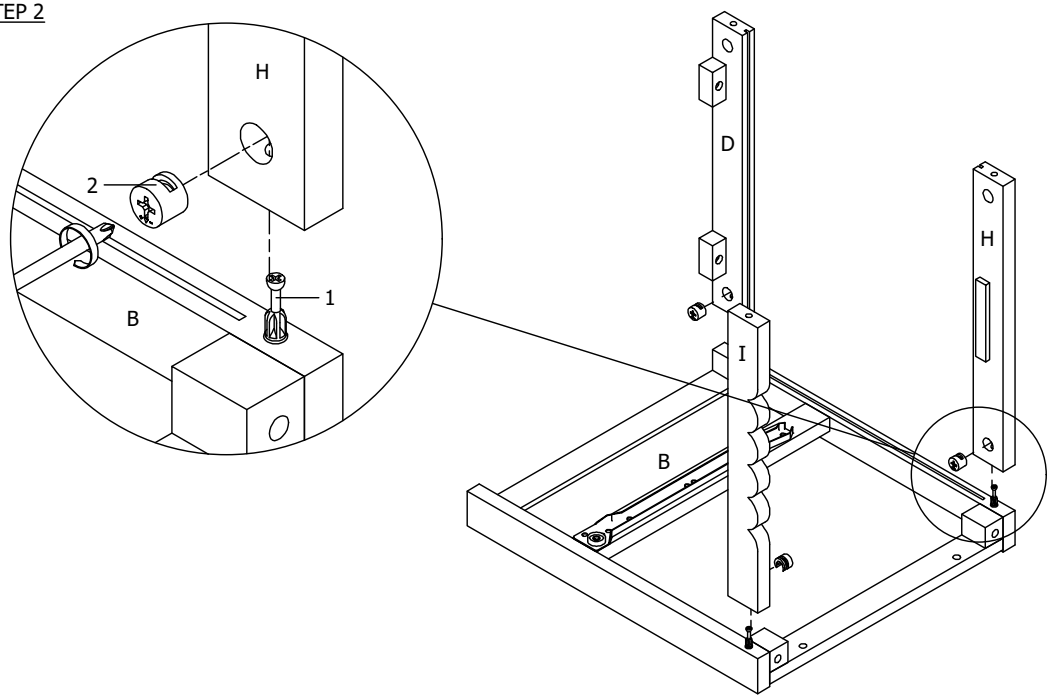

STEP 3

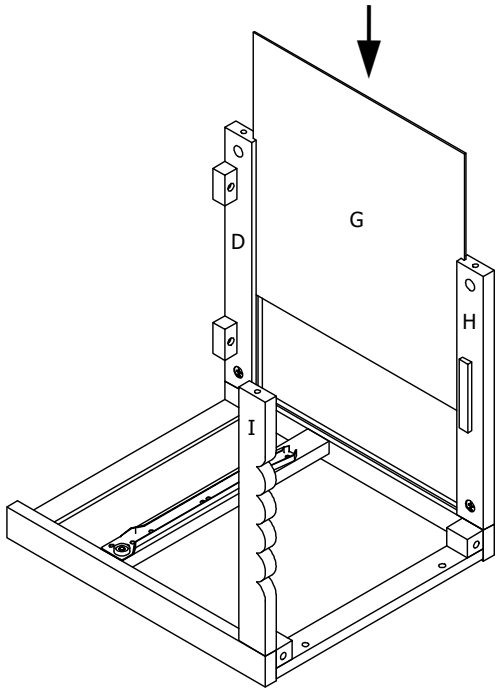

STEP 4

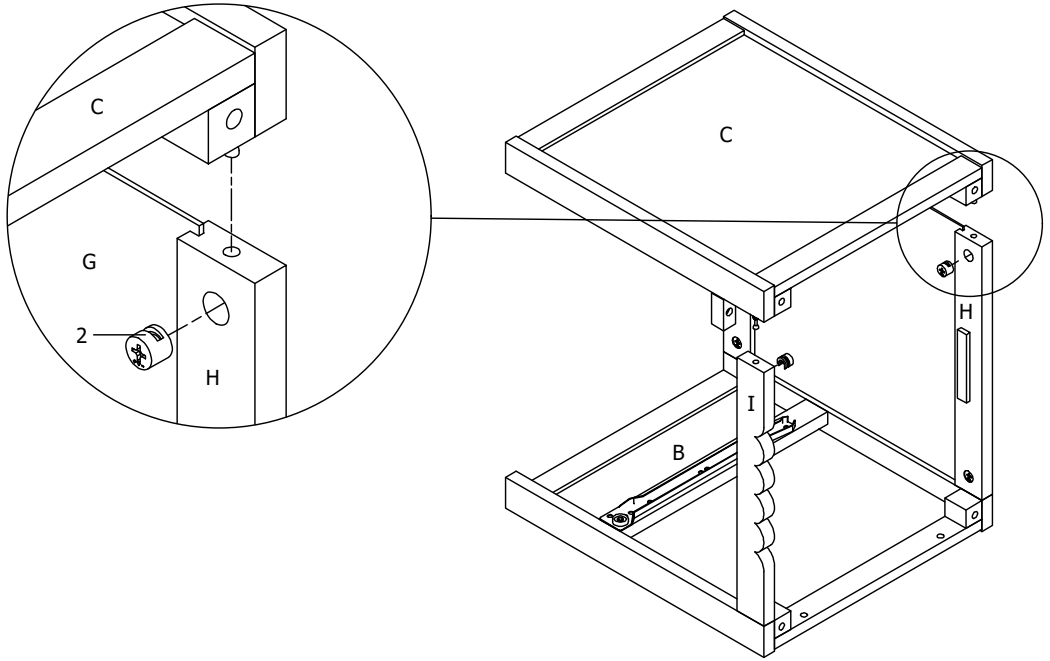

ASSEMBLY INSTRUCTION

STEP 5

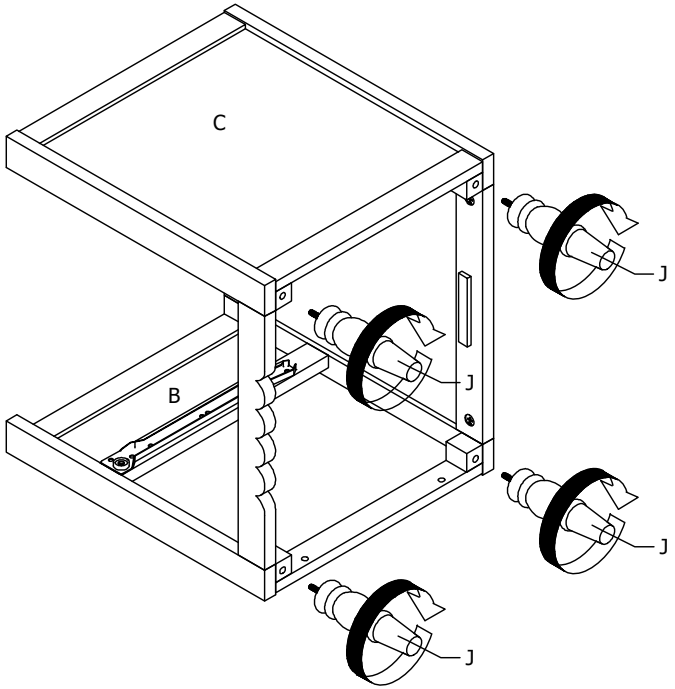

STEP 6

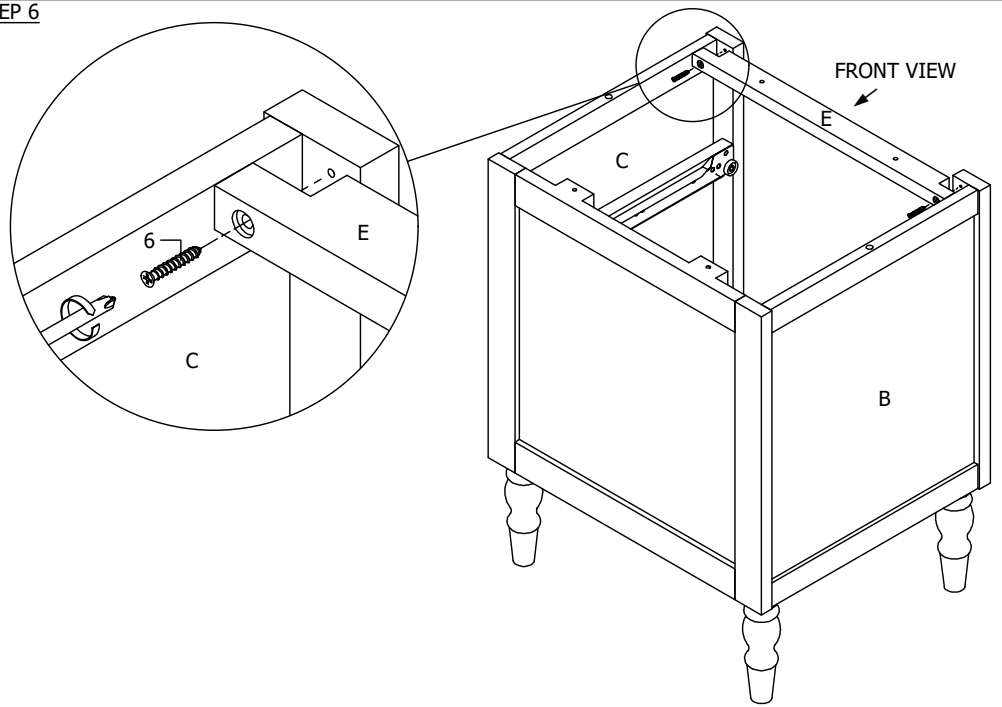

STEP 7

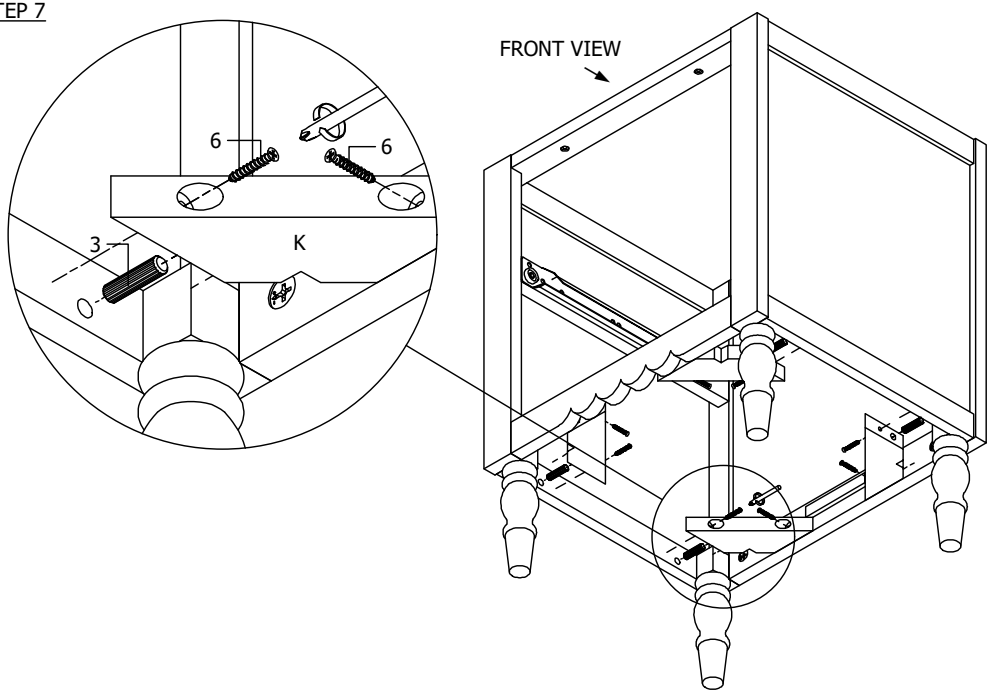

STEP 8

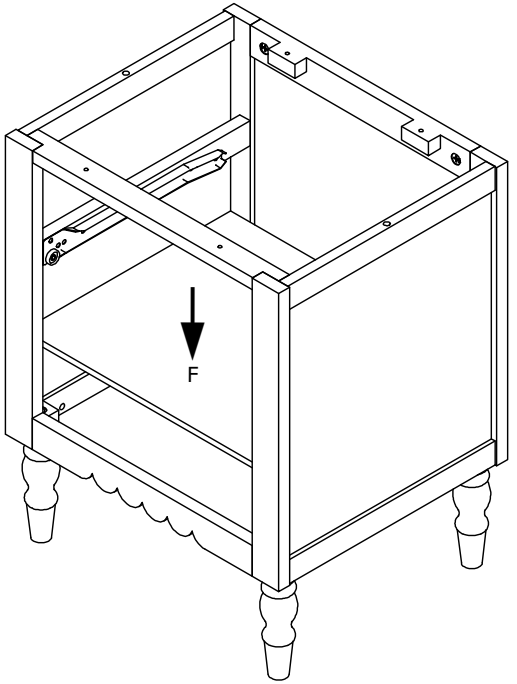

ASSEMBLY INSTRUCTION

STEP 9

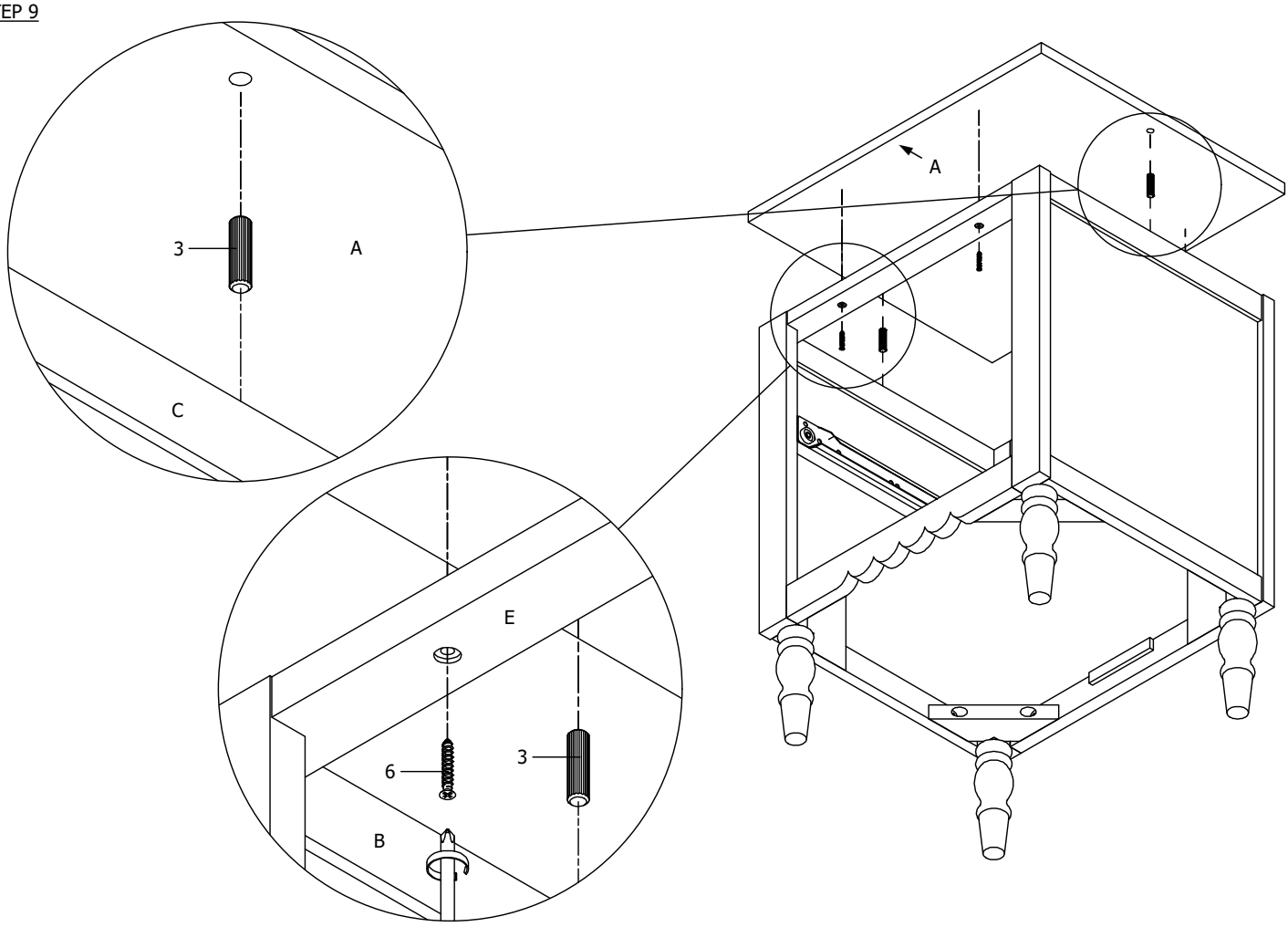
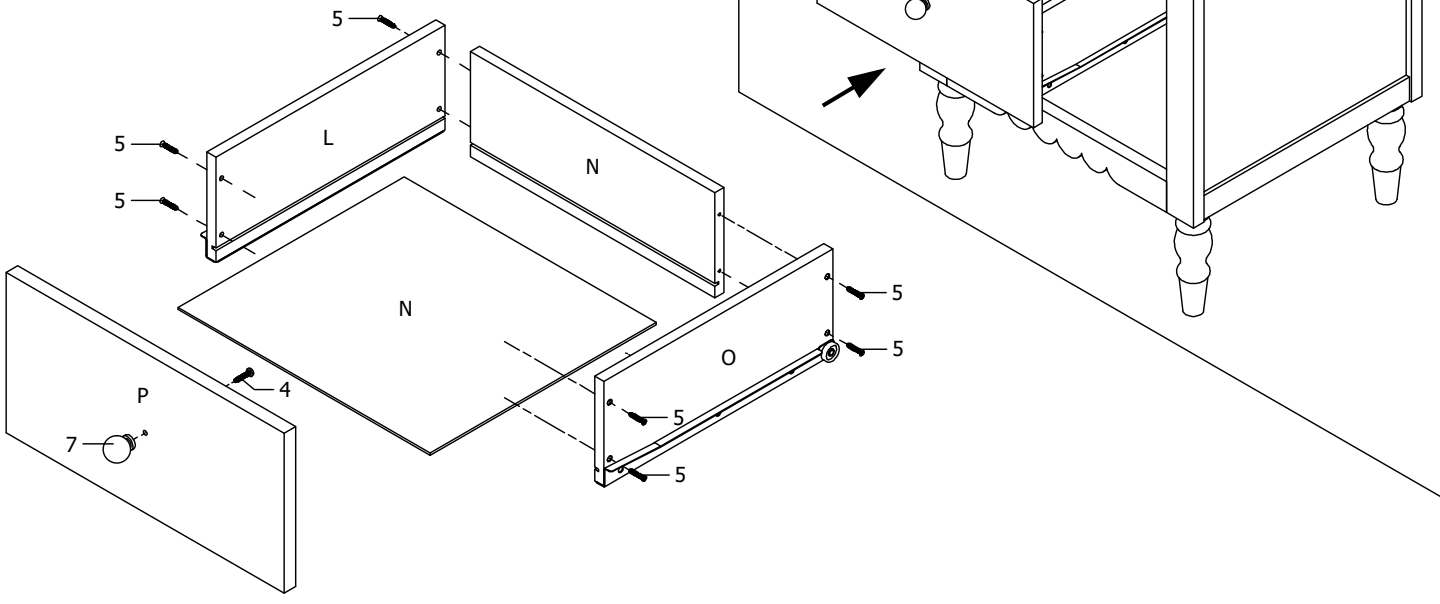
STEP 10 (ASSEMBLY COMPLETE)