ASSEMBLY INSTRUCTIONS

NAPOLEON SIDE CHAIR

HARDWARE PARTS:

8x1"
WOOD SCREW
6 PCS

M6x70mm
JCBC BOLT
8 PCS

M6x40mm
JCBC BOLT
2 PCS

M6
LOCK WASHER
10 PCS

M6.5x16.5mm
FLAT WASHER
10PCS

M4x2.1/2"
ALLEN KEY
1 PC

ASSEMBLY:

1. POSITION THE CHAIR BACK ON A SOFT SURFACE SUCH AS A CARPET. PLACE THE CHAIR BACK WITH THE DOWEL FULLY INSERTED INTO THE PRE-DRILLED HOLES. MAKE SURE APRON FRAME ON TO THE MIDDLE RAIL OF THE CHAIR THAT THE SCREW HOLES ON THE APRON FRAME ARE FACING

1.1. INSERT 70mm JCBC BOLT THROUGH A LOCK WASHER AND A FLAT WASHER INTO THE PRE-DRILLED HOLES ON THE APRON FRAME AT REAR CORNERS. TIGHTEN WITH THE ALLEN KEY PROVIDED.

1.2. INSERT THE 40mm JCBC BOLT THROUGH A LOCK WASHER AND A FLAT WASHER INTO THE PRE-DRILLED HOLES ON THE APRON FRAME AT REAR RAIL, TIGHTEN WITH THE ALLEN KEY PROVIDED.

2.. INSERT THE 70mm JCBC BOLT THROUGH A LOCK WASHER, A FLAT WASHER AND THE PRE-DRILLED HOLES OF CORNER BLOCK INTO THE PRE-DRILLED HOLES ON THE FRONT LEG, TIGHTEN THE JCBC BOLT WITH ALLEN KEY PROVIDED.

FIG.1

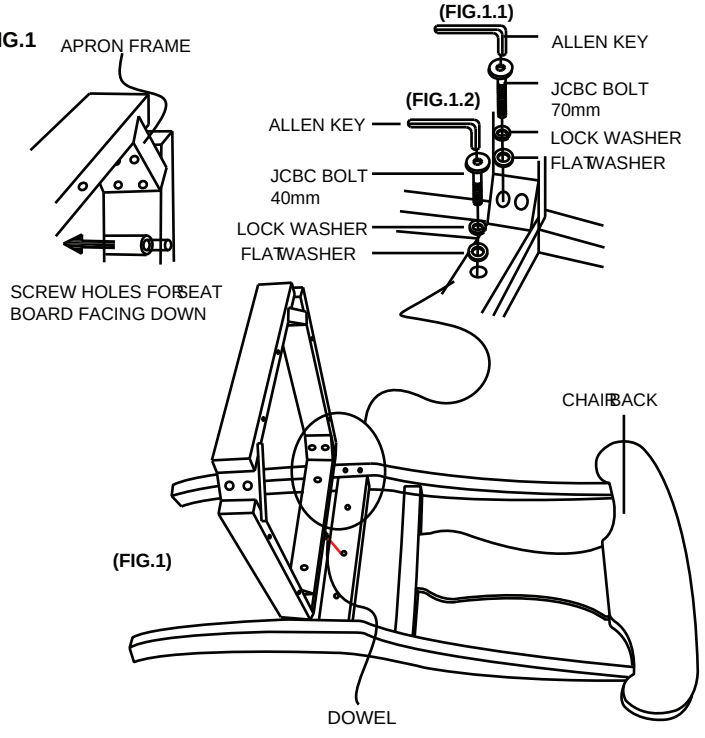

FIG.2

ASSEMBLE FRONT LEG AS SHOWN

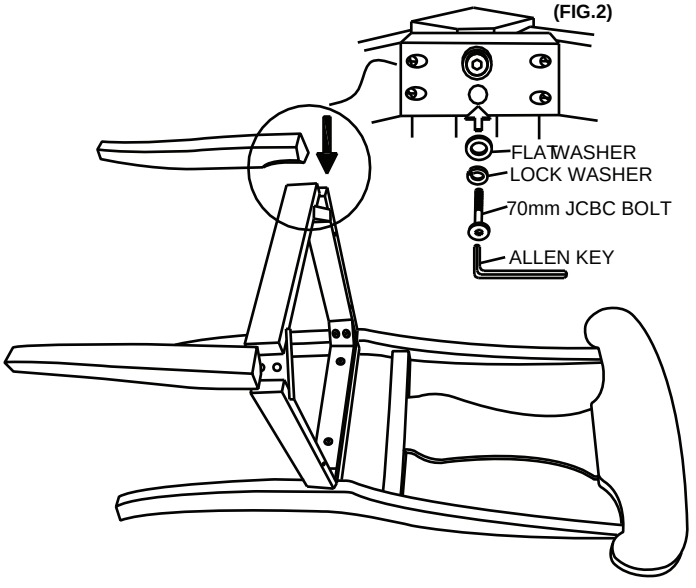

FIG. 3

3. FLIP CHAIR UPSIDE DOWN AND SECURE THE SEAT BOARD WITH THE 1" WOOD SCREW THROUGH THE PRE-DRILLED HOLES ON THE APRON FRAME.

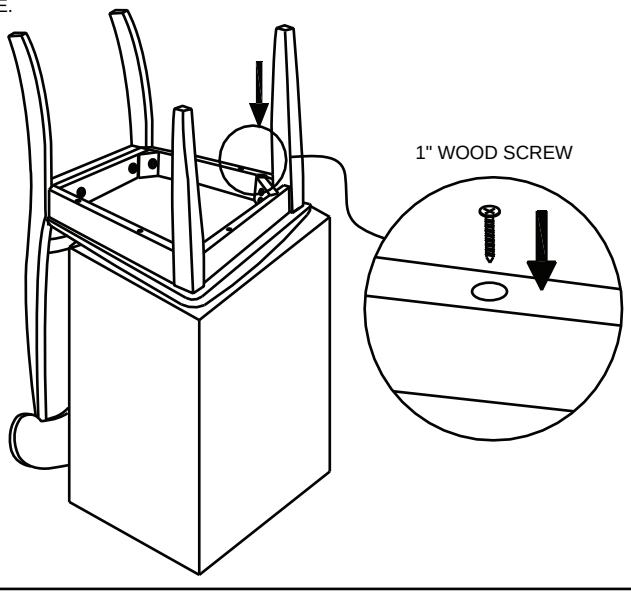

FIG. 4
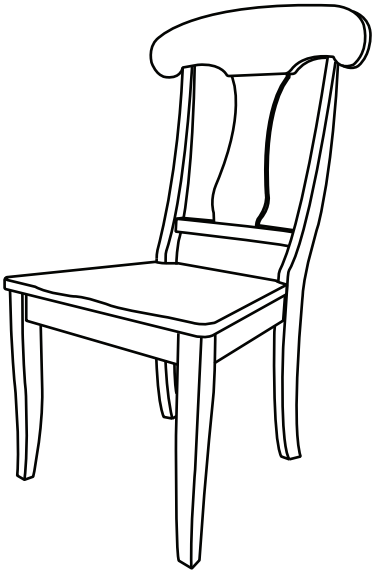
4.TURN THE CHAIR TO STANDING POSITION.