ASSEMBLY INSTRUCTIONS

STEP 1

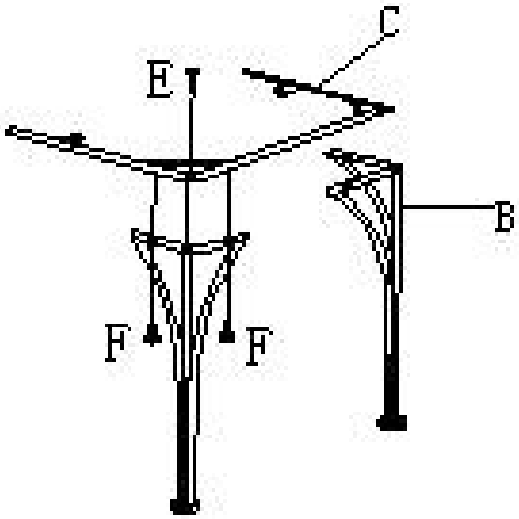

STEP 2

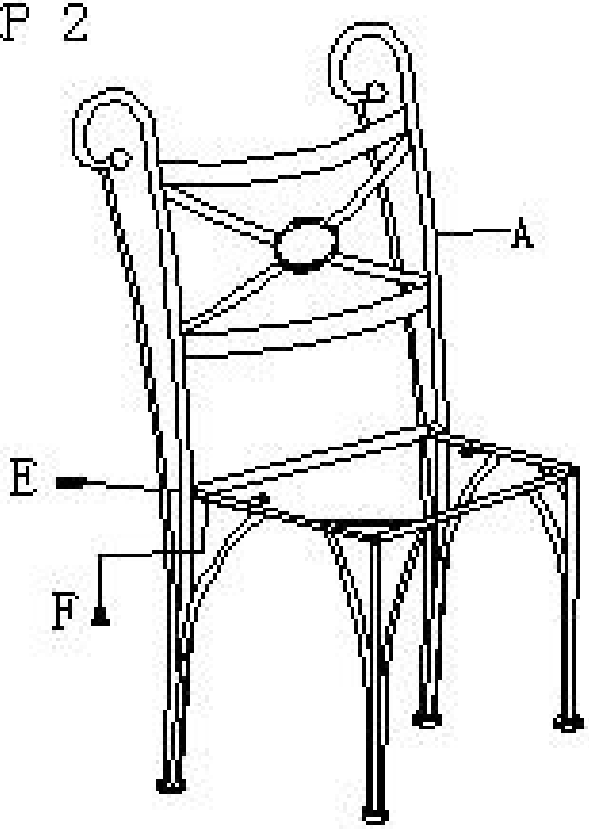

STEP 3

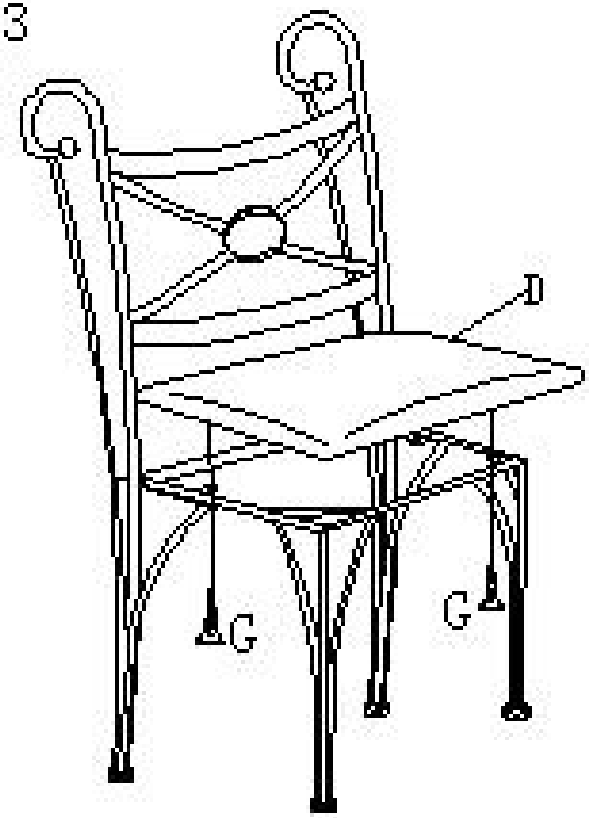

A		BACKREST	1PC	E		JCBC SCREW (L)	4PCS
				F		JCBC SCREW (S)	6PCS
B		LEGS	2PCS	G		SCREW	4PCS
C		SEAT FRAME	1PC	H		ALLEN KEY	1PC
D		CUSHION SEAT	1PC				